PLANETA
Lifting without limits

Operation and maintenance manual for

Low headroom trolley hoist PKB

Installation - Operation - Maintenance

IMPORTANT - READ BEFORE USE!

PLANETA-Hebetechnik GmbH • Resser Str. 17 & 23 • D-44653 Herne
Tel. +49 2325 9580-0 • Fax +49 2325 77077 • info@planeta-herne.de • www.planeta-hebetechnik.de

© Reprint, also in extracts, only with written permission of PLANETA-Hebetechnik GmbH
01-06-02-0000-0515-00-BA-EN-PLA

Introduction

This instruction manual is for an hoist trolley unit manufactured by PLANETA and contains important information for safe, proper and economic use. Observance of the manual helps to avoid dangerous situations, reduce repair costs, reduce downtimes and extend the service life of PLNETA hoist trolley units.

If any question arises, which is not addressed in this instruction manual, please contact your local authorised reseller or your contact person at PLANETA.

Important: Immediately upon delivery, inspect the product for any damage which might have been caused during transportation.

Do NOT install or commission a damaged product!

Immediately report damage caused during transportation to PLANETA.

After inspection, damaged items must be repaired or replaced, before installation and commissioning.

Assembly, installation, commissioning, tests and maintenance may only be executed by competent persons!

Each operator must have read the entire manual and fully understand its contents.

© Copyright 2015 by PLANETA. All rights reserved. No parts of this document may be reproduced or transmitted in any form or by any means electronic or mechanical, including photocopying and recording, for any purpose without the express written permission of PLANETA.

PLANETA hoist trolley unit specifications

Write down your PLANETA hoist trolley unit specifications on this page. The specifications can be found on the nameplate which is mounted to the Atlas hoist trolley unit. Year of manufacture :

Hoist manufacture no. :

Hoist model :

Trolley manufacture no. :

Trolley model :

Table of contents

Introduction 2
1 Definitions 5
2 Safety instructions 6
2.1 Symbols 6
2.2 Safety precautions 7
2.3 Purpose of use 7
2.4 Inappropriate use 7
2.5 Safe operation 7
2.6 Proper load attachment / suspension 8
2.7 Installation, commissioning, maintenance and repairs. 8
2.8 Periodic inspection and tests 8
3 General information 9
3.1 Technical specification 9
3.2 Factory warranty 9
3.3 Safe Working Load 9
3.4 Areas of application 9
3.5 Trolley nameplate designation 10
3.6 Trolley model designation 10
3.7 Hoist nameplate designation 11
3.8 Hoist model designation 11
3.9 Product overview and dimensions 12
3.9.1 Standard headroom 12
3.9.2 Low headroom 15
3.9.3 Ultra low headroom 17
4 Transport and Storage 19
5 Installation 20
6 Commissioning 23
7 Operation 24
8 Maintenance 26
8.1 Maintenance schedule 26
8.2 Lubrication list 27
8.3 Lubrication codes 28
8.4 Tightening torques 29
8.5 Chain 30
8.6 Hook 31
9 Malfunctions 33
10 Taking out of operation 34
11 Spare parts 35

11.1 Standard headroom 35
11.1.1 Model K hoist 38
11.1.2 Model N hoist 43
11.2 Low headroom 48
11.3 Ultra low headroom 49
Appendix I. Logbook 51
Appendix II. Technical specifications 52

1 Definitions

The following definitions are used in this manual:

Product	Wherever the term "product" is used this means the hoist trolley unit.
Hoist trolley unit	A hoist trolley unit means an trolley combined with an chain hoist to executed as a single unit with a standard headroom, low headroom or ultra low headroom.
Operators	Operators are persons who use and control the product. They are well trained and conscious of the risks which may arise during operation and incorrect usage. Operators are well aware of the precautions, prevailing conditions and applicable regulations. They have proven their ability by experience and are authorised to control the product.
Competent person's	Competent persons have a theoretical basis as well as a practical experience in the field of lifting equipment. They possess excellent knowledge of the product, safety regulations, directives and general accepted rules of lifting techniques, which enables them to decide whether the product can be safely used and operated. Only competent persons may execute assemblies, installations, commissioning, tests and maintenance.

2 Safety instructions

The products of PLANETA are equipped with safety devices, such as limit switches, overload protection, brakes, etc. However, danger which arises from improper use cannot be prevented with our safety devices. Please read the safety instructions of this manual carefully to work as safe as possible. Note that some safety devices are optional and may not be included.

2.1 Symbols

This manual contains safety instructions with several different safety notices. The safety notices are classified according to the severity of the danger and the probability of its occurrence.

Danger
Gives warning of an imminent danger to health and life. Ignoring these warning notices will lead to severe injuries, possibly resulting in death

Warning
Gives warning of situations which are potentially dangerous to health and life. Ignoring these warning notices may lead to severe injuries.

Caution
Gives warning of situation which can lead to minor injuries or damage to the device or its surrounding.

Suspended load warning
It is forbidden to stand underneath suspended loads. This entails risks to life and limb.

Injuries to hand warning
This notice indicates danger of crushing or cutting hands and fingers. The appropriate personal protective equipment should be worn for this task to avoid injury.

Attention
Important information to prevent difficulties or dangerous situations

Tip
Useful information or tip.

2.2 Safety precautions

The product can only be controlled by operators with the following qualifications:

- Complete knowledge of this manual.
- Reached the age of 18.
- Capable both physically and mentally.
- Have been instructed in operating and maintaining the product and have shown proof of their competence.
- May be expected to perform the duties assigned to them reliably and have awareness of the risks and dangers.

The following organisational measures shall be taken:

- A safe and clear working environment shall be ensured.
- The operating instructions must be stored properly and easily available for the operator.
- At regular intervals, check that work is being carried out in a safety-conscious manner.
- Observe the intervals specified for periodic maintenance and tests. File the reports in the product logbook.
- Safety regulation and accident prevention policy are implemented properly.
- Compliance with national regulations.

2.3 Purpose of use

- The product shall be used for vertical lifting of loads within the limits of the technical specifications.
- The product may only be loaded up to the safe working load as specified in the technical specifications.
- Always lift and tension in a straight vertical line between the load and the hoist trolley unit.
- If the product is used for special applications beyond the technical specifications, the individual application must be assessed. In case of doubt contact Van Leusden B.V.
- The product is only to be used in combination with a supporting structure that is properly designed and dimensioned.

2.4 Inappropriate use

- Use in areas with potentially explosive atmospheres.
- Using the hoist trolley unit to transport people is strictly forbidden.
- Using the hoist trolley unit with people walking / moving underneath the load.
- Exceeding the safe working load of the trolley and or hoist under the specified conditions.
- Operation exceeding the allowed operating circumstances as mentioned in the technical specification (For example; reduced capacity, temperatures, etc.).
- Using a damaged hoist trolley unit or hoist trolley unit with defective parts.
- Pulling, dragging or towing loads.
- Lifting loads at an angle exceeding the specified limitations.
- Shorting or knotting of hoisting chain.

- Removing the safety latch of the hook.
- Using the hoist with slack or twisted chain.
- Touching the moving parts, such as chain, sprockets, wheels, etc.
- If the hoist trolley unit forms a part of a machine or installation, customer is responsible that the product meets the specific regulations of the application.
- Any fundamental alterations and modifications. Fundamental alterations and modifications to the hoist trolley unit must be approved by Van Leusden B.V. Van Leusden B.V. cannot accept any liability for malfunctioning or damage after these changes are made without approval.

2.5 Safe operation

- The operator is responsible for the safe operation, lifting and avoiding all possible risks involved at the working environment.

- The operator shall have complete knowledge of the manual and the operating instructions before starting to work with the product.
- The operator shall perform daily checks before operating.
- Never put yourself under a suspended load. Danger to life and limb!

- Make sure before starting with lifting, that the safe working load will not be exceeded. See chapter 3.3 “Safe Working Load”.
- If overload occurs always inspect the hoist trolley unit for any damage.
- Never put limbs between parts which might pinch or cut.
- Do not lift a load with loose parts, which can fall down, attached.
- Take notice of the relevant instructions when attaching loads.
- Operate from a place with clear sight and overview.
- Never stand between the load and wall or construction.
- Start lifting carefully when picking up the load.
- When lifting and setting down loads, ensure that they are in a stable position in order to avoid accidents.
- Never try to solve a malfunction while the load is suspended.
- Never use bended, distorted or broken load hooks.
- Never attempt to straighten the hook when it is distorted.
- Never apply a heat treatment to the hook.
- Never try to join or weld a load chain.
- Never touch metal components that are colder than 0°C or hotter than 55°C without protective gloves.
- Do not remove or bypass safety devices
- Immediately report damage and defects of the product to the responsible person. Do not use the product until the faults have been eliminated.
- Do not remove information plates from the product. Replace illegible or damaged plates.
- The hoist and trolley shall be tested and inspected by a relevant authority before commissioning.

2.6 Proper load attachment / suspension

- Use only tested and approved slings to attach the load.
- Never use the hoist trolley unit when the load chain is damaged.
- Ensure a load is always suspended above the centre of gravity.
- The load must always be suspended from the base of the hook. The tip of the hook must not be subjected to load.
- Removing the safety latch from suspension and load hooks is not permitted.

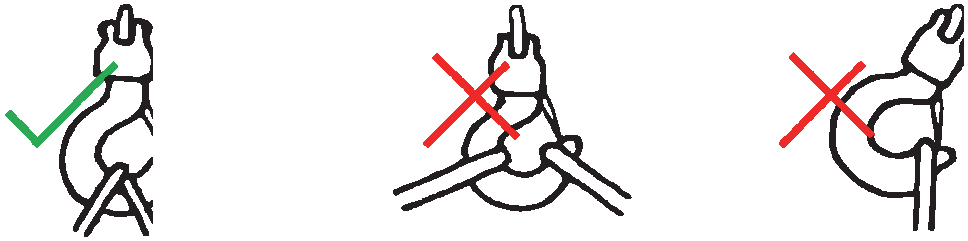

2.7 Installation, commissioning, maintenance and repairs.

- Only competent persons may perform installation, commissioning, maintenance and repairs.
- Only original spare parts may be used for repairs.
- We recommend having installation and commissioning carried out by personnel engaged by the manufacturer.
- Do not carry out any alterations or modifications.
- Any additional outfitting must be approved by the manufacturer.
- Dismantled guards and safety devices must be properly re-installed.
- The system shall always be tested before putting it back into operation.

2.8 Periodic inspection and tests

- A competent person must test the product and supporting structures with periodic intervals according to the regulations of the country once a year. It may be necessary to carry out tests more often if the operating conditions demand it.
- The results of the tests must be recorded and filed in the logbook.

3 General information

This manual describes an PLANETA hoist trolley unit for heavy duty use in an industrial environment.

3.1 Technical specification

If deviating specification are applicable, then the technical specifications can be found in Appendix II "Technical specifications", and may contain one or more of the following items:

- Scope of supply, data & specifications
- General hoist and trolley data
- Mechanical specifications & surface treatment

3.2 Factory warranty

The warranty period of the product, as specified in the technical specification, becomes invalid if:

- The instructions in this manual for installation, operation, inspection, maintenance, storage, transport etc. are not followed.
- Repairs and eliminations of faults are executed without been consulted and approved by PLANETA.
- Repairs and eliminations of faults are executed by incompetent persons.
- The product is modified or non-original spare parts are used.
- The product is improperly used.

If any question arises concerning the warranty, contact your local authorised reseller or your contact person at PLANETA.

3.3 Safe Working Load

The design is based on the safe working load specified in the technical specification of the product. It is the operator's responsibility not to go beyond what is permitted. The maximum permitted working load, indicated in kilograms or metric tons, can be found on the nameplate.

Standard headroom and low headroom hoist trolley units can optionally be executed with an overload protection device. Ultra low headroom hoist trolley units always have the overload protection device built in. If equipped with an overload protection device, the slipping clutch will be activated between 125% and 150% of the safe working load. When activated, the hoist can only be lowered to reduce the load below the safe working load.

3.4 Areas of application

Model K hoist trolley units are designed to withstand ambient temperatures of -20°C to +40°C and humidity up to 100%, but not submerged in water.

Model N hoist trolley units are designed to withstand ambient temperatures of -15°C to +40°C and humidity up to 90%.

If the hoist trolley unit is continuously used in a high humidity environment with temperature fluctuations, there is a chance that condensation occurs which may reduce the lifespan of the hoist trolley unit. The maximum designed longitudinal slope of the traveling surface is 0.17°. When the hoist trolley unit is frequently used in an outside environment, it shall be protected against the effect of weather for example: rain, hail, snow, direct sunlight, dust, etc.

Danger! Hoist trolley units may not be used for transport of persons.

Danger! Hoist trolley units are not designed for use in potentially explosive atmospheres.

Hoist trolley units can optionally be executed for use in other circumstances. For example:

- Dusty, greasy and/or high humidity environments.
- Offshore and/or corrosive environments.
- Potentially explosive atmospheres (Ex areas).
- Food industries.
- Use in extreme high or low temperatures.

3.5 Trolley nameplate designation

The nameplate contains product specific information and can be found fixed to the trolley. The actual nameplate mounted can differ from the example illustration below.

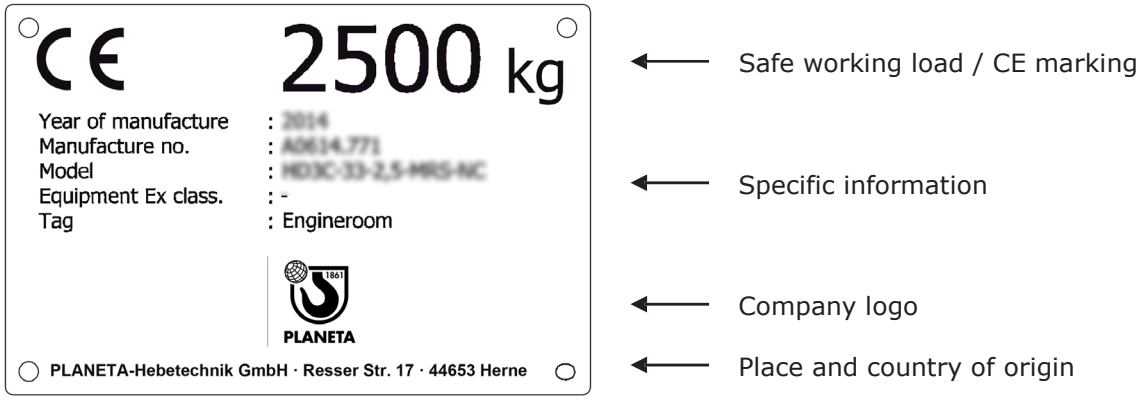

In the middle of the nameplate, a small list of specific information is shown for the product.

3.6 Trolley model designation

The model description describes how the trolley is executed. The execution parameters can be converted through the table below:

Type -33-2,5-MRS-NC

- Non corrosive
- Headroom
  - S Standard
  - L Low
  - U Ultra Low
- Model execution
  - P Push
  - G Geared
  - W Worm geared
  - H Helical geared
  - S Swinging beam
  - C Articulated for curved beams
  - R Rack and pinion
  - F Friction wheel system
  - T Personal transportation
- Drive model
  - M Manual
  - E Electric
  - P Pneumatic
  - H Hydraulic
- Capacity in tons (1 ton = 1000 kg)
- Chassis type in Kilo Newton (kN)
- Trolley

For example, the above model description describes a 2,5 tons trolley with a 33 kN chassis. The trolley is of type manual rack and pinion with standard headroom and is treated to be non-corrosive.

Tip! If the table does not match the model number, it's probably due to deviating specifications and/or a special design.

3.7 Hoist nameplate designation

The nameplate contains product specific information and can be found fixed to the hoist. The actual nameplate can differ from the example illustration below.

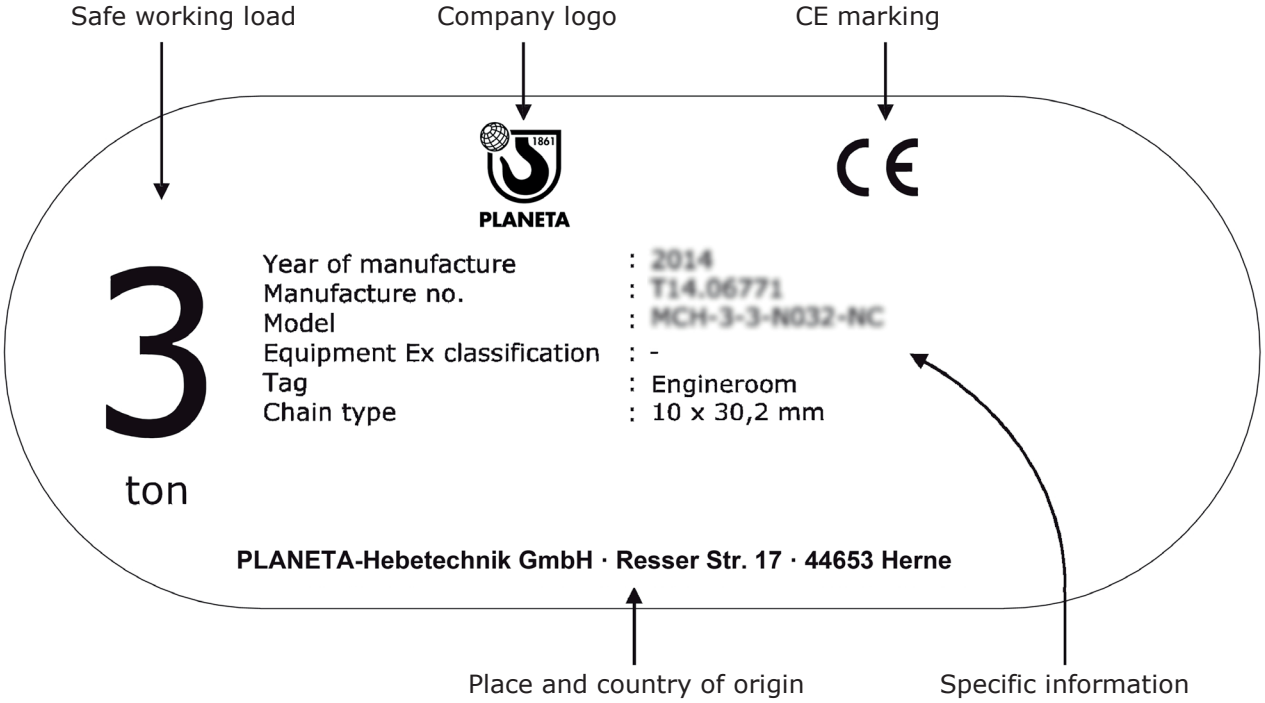

In the centre of the nameplate, a small list of specific information is shown for the product.

3.8 Hoist model designation

The model description describes how the hoist is executed. The execution parameters can be converted through the table below:

Type-3-3-N032-NC

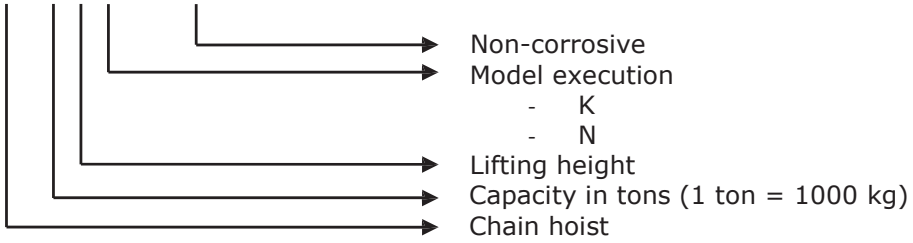

For example, the above model description describes a 3 tons Chain hoist. The hoist has 3 meters of lifting height and is executed in model N. The hoist is treated to be non-corrosive.

Tip! If the table does not match the model number, it's probably due to deviating specifications and/or a special design.

3.9 Product overview and dimensions

In this chapter the main components and dimension of standard headroom, low headroom and ultra low headroom hoist trolley units are given. All illustrations show the default configuration, which might differ from reality.

3.9.1 Standard headroom

Below illustration shows the main components of a standard headroom hoist trolley unit.

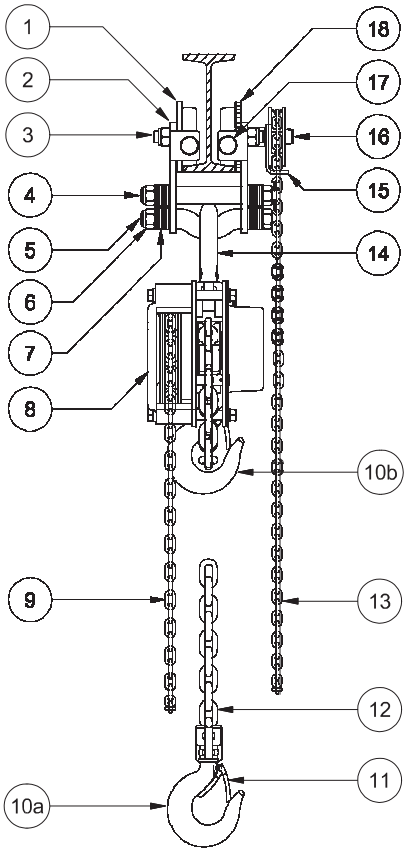

Component description

1. Single flange wheel
2. Side plate
3. Wheel shaft
4. Adjustable support bolt
5. Adjustable bended suspension bolt
6. Hexagon lock nut
7. Adjustment washers
8. Hoist body
9. Hand chain hoist control

10a. Load hook
10b. Load hook in highest position
11. Safety latch load hook
12. Load chain
13. Hand chain trolley control
14. Top hook
15. Hand chain wheel assembly
16. Drive shaft assembly
17. Rubber buffer (Optional)
18. Single flange geared wheel

Dimensions

Below illustration and dimension table 1, shall be used for the dimensions of a standard headroom model K hoist trolley unit. For standard headroom model N hoist trolley units, dimension table 2 shall be used. If applicable, dimensions of other configurations are enclosed in Appendix II "Technical specifications" or can be obtained through your contact person at PLANETA upon request.

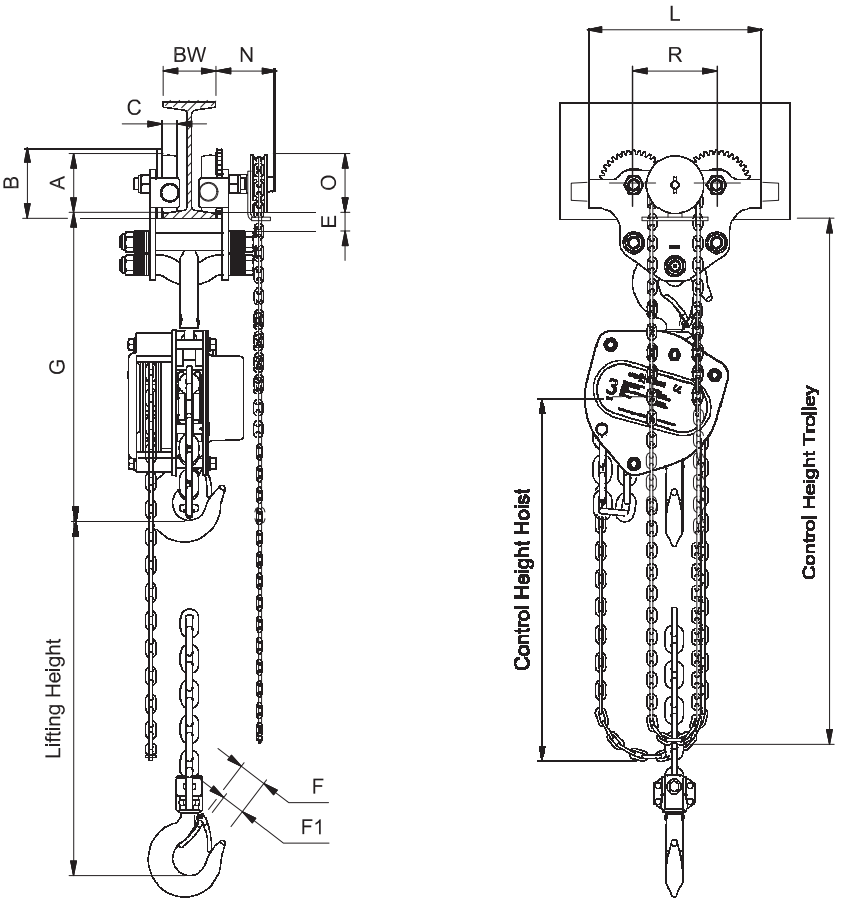

Standard headroom model K dimensions

Weight 3 meters lift	Chassis	No. of falls	Headroom	Dimensions										
kg		mm		G	A	B	C	E	F	F1	R	L	N	O
500	6 kN	55~102 105~152	1	13	337	Ø45	Ø60	15	15	31,1	27	75	150	-	-
1.000	11 kN	55~102 105~152 156~203 206~254	1	17,5	355	Ø60	Ø75	18	20	34,6	29	99	190	90	Ø100
1.500	22 kN	74~127 127~180 190~243 254~305	1	26,5	425	Ø80	Ø100	22	27	38,8	34	123	255	90	Ø100
2.000	22 kN	74~127 127~180 190~243 254~305	1	32	450	Ø80	Ø100	22	27	40	36	123	255	90	Ø100
2.500	33 kN	90~143 149~203 203~254 251~305	1	46	510	Ø100	Ø120	25	35	42,5	40	144	300	95	Ø100

3.000	33 kN	90~143 149~203 203~254 251~305	2	43	600	Ø100	Ø120	25	35	46	42,5	144	300	95	Ø100
5.000	52 kN	106~156 160~210 210~260 255~305	2	73	717	Ø125	Ø150	30	40	50	46,5	174	375	130	Ø135
7.500	84 kN	>= 119	3	150	915	Ø160	Ø190	35	45	79,5	72,5	220	450	130	Ø270
10.000	104 kN	>=131	4	174	905	Ø160	Ø190	35	45	79,2	72,5	220	450	130	Ø270
15.000	164 kN	>=155	6	294	1.165	Ø200	Ø240	50	42	94,6	80	272	560	170	Ø300
20.000	204 kN	>=170	8	377	1.345	Ø200	Ø240	50	42	95,7	81	272	560	170	Ø300
30.000	-	-	10	-	-	-	-	-	-	118	103	-	-	-	-
40.000	-	-	14	-	-	-	-	-	-	108	96	-	-	-	-
50.000	-	-	16	-	-	-	-	-	-	118	100	-	-	-	-

Dimension table 1

Standard headroom model N dimensions

Capacity	**Chassis**	**Monorail with** BW	**No. of falls**	**Weight** 3 meters lift	**Headroom**	**Dimensions**									
kg		mm		kg	G	A	B	C	E	F	F1	R	L	N	O
500	6 kN	55~102 105~152	1	11	315	Ø45	Ø60	15	15	30	24	75	150	-	-
1.000	11 kN	55~102 105~152 156~203 206~254	1	20	360	Ø60	Ø75	18	20	36	29	99	190	90	Ø100
1.600	22 kN	74~127 127~180 190~243 254~305	1	30	420	Ø80	Ø100	22	27	39	31	123	255	90	Ø100
2.000	22 kN	74~127 127~180 190~243 254~305	1	36	455	Ø80	Ø100	22	27	39	31	123	255	90	Ø100
3.200	33 kN	90~143 149~203 203~254 251~305	1	53	525	Ø100	Ø120	25	35	48	39	144	300	95	Ø100
5.000	52 kN	106~156 160~210 210~260 255~305	3	70	690	Ø125	Ø150	30	40	56	47	174	375	130	Ø135
10.000	104 kN	>=131	3	175	935	Ø160	Ø190	35	45	75	68	220	450	130	Ø270
16.000	164 kN	>=155	5	305	1.185	Ø200	Ø240	50	42	90	81	272	560	170	Ø300
20.000	204 kN	>=170	6	415	1.205	Ø200	Ø240	50	42	90	81	272	560	170	Ø300
25.000	254 kN	>=185	8	495	1.265	Ø200	Ø240	50	42	90	81	272	570	170	Ø300
32.000	-	-	10	-	-	-	-	-	-	-	-	-	-	-	-
40.000	-	-	14	-	-	-	-	-	-	-	-	-	-	-	-
50.000	-	-	20	-	-	-	-	-	-	-	-	-	-	-	-

Dimension table 2

Standard headroom hoist trolley unit are executed with a fixed or adjustable suspension set within the range of monorail widths BW as mentioned in above tables.

3.9.2 Low headroom

Below illustration shows the main components of a low headroom hoist trolley unit.

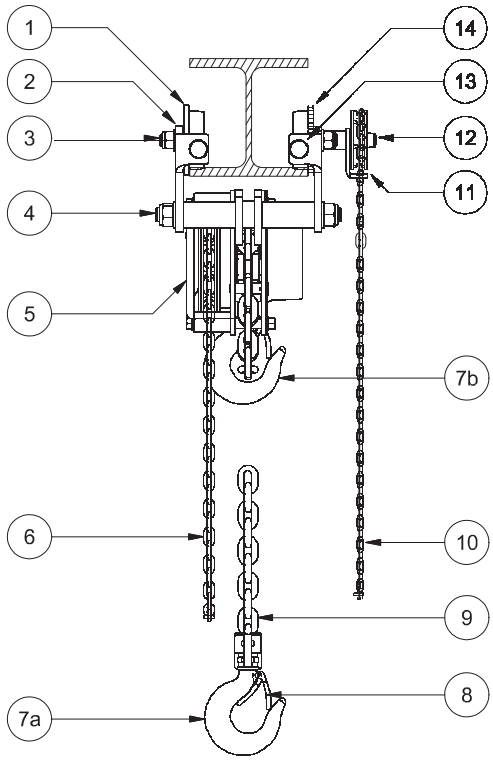

Component description

1. Single flange wheel
2. Side plate
3. Wheel shaft
4. Suspension bolt
5. Hoist body
6. Hand chain hoist Control

7a. Load hook

7b. Load hook in highest position

8. Safety latch load hook
9. Load chain
10. Hand chain trolley control
11. Hand chain wheel assembly
12. Drive shaft assembly
13. Rubber buffer (Optional)
14. Single flange geared wheel

Dimensions

Below illustration and dimension table 3, shall be used for the dimensions of a low headroom model K hoist trolley unit. For low headroom model N hoist trolley units, dimension table 4 shall be used.

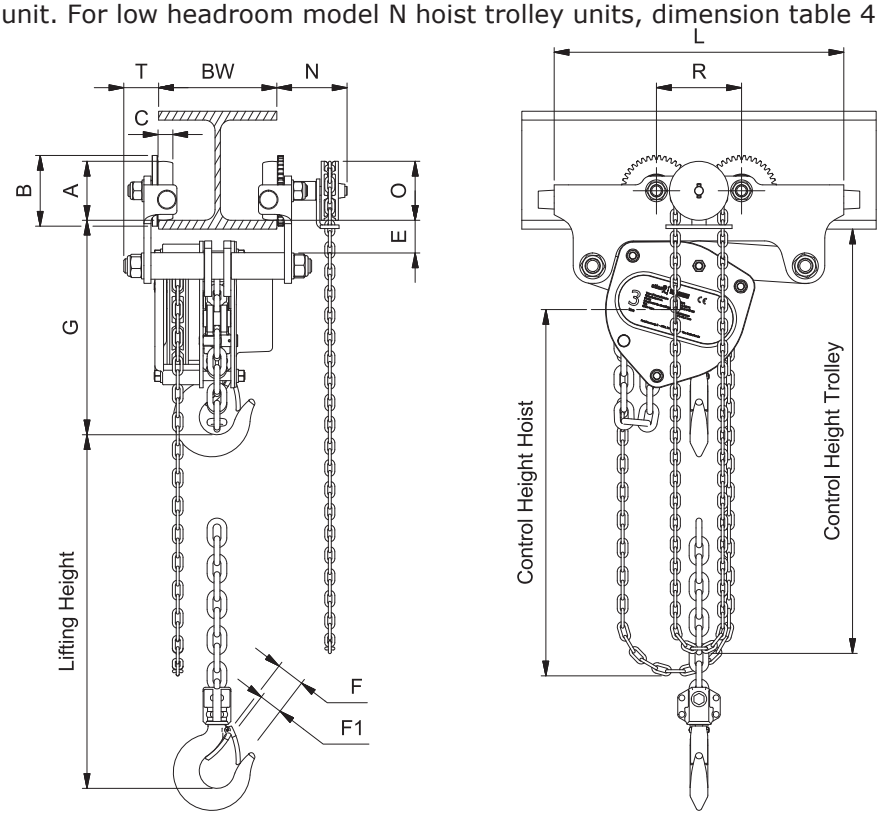

Low headroom model K dimensions

Capacity	**Chassis**	**Monorail width** BW	**No. of falls**	**Weight** 3 meters lift	**Headroom**	**Dimensions**										
kg		mm		kg	G	A	B	C	E	F	F1	R	T	L	N	O
500	11 kN	55-300	1	21,5	260	Ø60	Ø75	18	20	31,1	27	99	42	310	90	Ø100
1.000	11 kN	55-300	1	23	270	Ø60	Ø75	18	20	34,6	29	99	42	310	90	Ø100
1.500	22 kN	74-300	1	35	280	Ø80	Ø100	22	27	38,8	34	123	49	395	90	Ø100
2.000	22 kN	74-300	1	40	310	Ø80	Ø100	22	27	40	36	123	49	395	90	Ø100
2.500	33 kN	90-300	1	60	370	Ø100	Ø120	25	35	42,5	40	144	59	455	95	Ø100
3.000	33 kN	90-300	2	55	435	Ø100	Ø120	25	35	46	42,5	144	59	455	95	Ø100
5.000	52 kN	106-300	2	100	530	Ø125	Ø150	30	40	50	46,5	174	65	590	130	Ø135
7.500	104 kN	115-300	3	220	670	Ø160	Ø190	35	42	79,5	72,5	220	82	800	134	Ø270
10.000	104 kN	115-300	4	220	640	Ø160	Ø190	35	42	79,2	72,5	220	82	800	134	Ø270

Dimension table 3

Low headroom model N dimensions

Capacity	**Chassis**	**Monorail width** BW	**No. of falls**	**Weight** 3 meters lift	**Headroom**	**Dimensions**										
kg		mm		kg	G	A	B	C	E	F	F1	R	T	L	N	O
500	6 kN	55-300	1	12	210	Ø45	Ø60	15	15	30	24	75	33	248	-	-
1.000	11 kN	55-300	1	22	245	Ø60	Ø75	18	20	36	29	99	42	310	90	Ø100
2.000	22 kN	74-300	1	40	315	Ø80	Ø100	22	27	42	34	123	49	395	90	Ø100
3.200	33 kN	90-300	1	60	370	Ø100	Ø120	25	35	48	39	144	59	455	95	Ø100
5.000	52 kN	106-300	3	75	485	Ø125	Ø150	30	40	56	47	174	65	590	130	Ø135
10.000	104 kN	115-300	3	180	670	Ø160	Ø190	35	45	75	68	220	82	800	134	Ø270

Dimension table 4

Low headroom hoist trolley units are executed with a fixed suspension set within the range of monorail widths BW as mentioned in above tables.

3.9.3 Ultra low headroom

Below illustration shows the main components of a ultra low headroom hoist trolley unit.

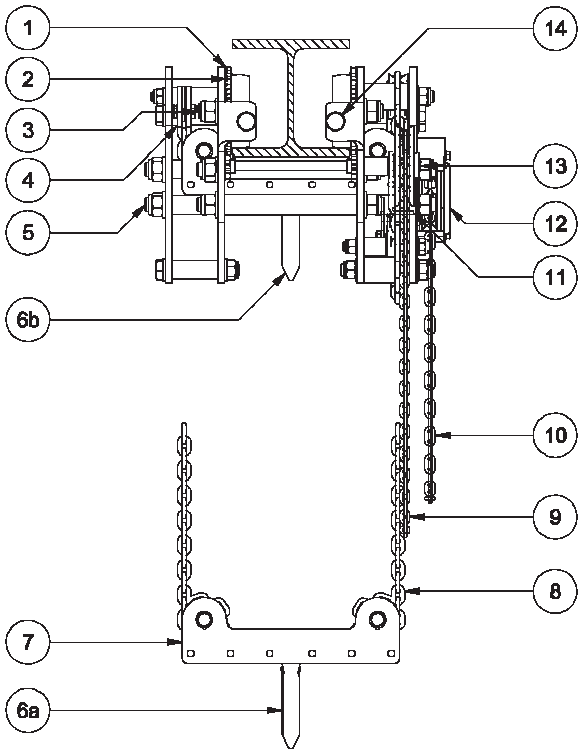

Component description

1. Single flange wheel
2. Single flange geared wheel
3. Wheel shaft
4. Fixed end point of load chain
5. Suspension bolt

6a. Load hook
6b. Load hook in highest position

7. Bottom hook block
8. Load chain
9. Hand chain trolley control
10. Hand chain hoist control
11. Hand chain wheel assembly
12. Hoist body
13. Drive shaft assembly
14. Rubber buffer (Optional)

Dimensions

Below illustration and dimension table 5, shall be used for the dimensions of a ultra low headroom model K hoist trolley unit. For ultra low headroom model N hoist trolley units, dimension table 6 shall be used.

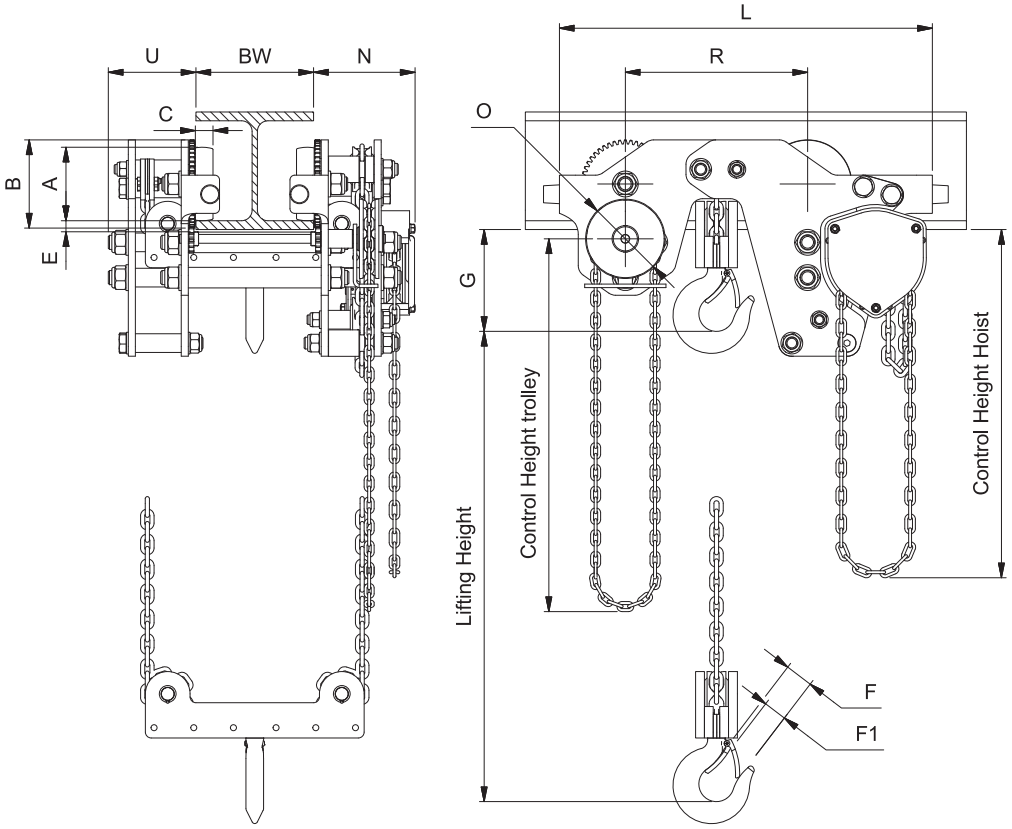

Ultra low headroom model K dimensions

Capacity	**Chassis**	**Monorail width** BW	**No. of falls**	**Weight** 3 meters lift	**Headroom**	**Dimensions**										
kg		mm		kg	G	A	B	C	E	F	F1	R	L	N	U	O
1.000	22 kN	74-300	2	45	130	Ø80	Ø100	22	21	34,6	29	226	491	152	104	Ø100
2.000	33 kN	90-300	2	86	162	Ø100	Ø120	25	22	40	36	266	551	150	111	Ø135
3.000	52 kN	106-300	2	140	183	Ø125	Ø150	30	19	46	42,5	310	635	174	149	Ø135
5.000	84 kN	119-300	2	315	257	Ø160	Ø190	35	36	40	38	430	894	208	196	Ø300
10.000	124 kN	134-300	4	410	270	Ø160	Ø190	35	35	50	47	630	1.100	208	196	Ø375

Dimension table 5

Ultra low headroom model N dimensions

Capacity	**Chassis**	**Monorail width** BW	**No. of falls**	**Weight** 3 meters lift	**Headroom**	**Dimensions**										
kg		mm		kg	G	A	B	C	E	F	F1	R	L	N	U	O
1.000	22 kN	74-300	2	45	130	Ø80	Ø100	22	21	36	29	226	466	140	104	Ø100
2.000	33 kN	90-300	2	86	162	Ø100	Ø120	25	22	42	34	266	551	137	106	Ø135
3.200	52 kN	106-300	2	136	183	Ø125	Ø150	30	19	48	39	310	634	173	149	Ø135
6.300	84 kN	119-300	2	311	277	Ø160	Ø190	35	35	45	42	430	894	223	196	Ø300
12.000	124 kN	134-300	4	408	270	Ø160	Ø190	35	35	50	47	600	1.070	223	196	Ø375

Dimension table 6

Ultra low headroom hoist trolley units are executed with a fixed suspension set within the range of monorail widths BW as mentioned in above tables.

4 Transport and Storage

Transport
If necessary, the hoist trolley unit can be transported to another location. To prevent damage while transporting, follow the steps below.

- Lift the load hook to its highest position.
- Put the housing down on a stable underground.
- Fixate the chain. This can be achieved by tying the chain together or putting it in a chain bag or box.
- Make sure the chain bag or box is fixated.

If the hoist trolley unit is transported over longer distances, follow the additional steps below.

- The hoist trolley unit shall be transported in a closed and/or sealed packing.
- Fixate the hoist trolley unit and its components to the transport packing.
- The hoist trolley unit shall be kept free from excessive vibrations.

Storage
To keep the hoist trolley unit in good condition while storing for a period longer than six months follow the steps below.

Attention! If the hoist trolley unit is going to be stored for a period shorter than six months read chapter 10 "Taking out of operation".

- The hoist trolley unit may only be stored in unloaded condition.
- Perform routine maintenance and maintenance for storage. See chapter 8.1 "Maintenance schedule".
- The environment should be clean and dry.
- If necessary, the hoist trolley unit shall be cleaned.
- The hoist trolley unit shall be kept free from excessive vibrations.
- The hoist trolley unit shall be protected against excessive water, wind and salt
- The hoist trolley unit shall be stored in a closed and/or sealed packing.
- Observe environmental protection laws (do not allow oil etc. to leak).

Model K
- Temperature not colder than -20°C or hotter than +40°C.

Model N
- Temperature not colder than -15°C or hotter than +40°C.

Sea fastening
An hoist trolley unit installed on a ship shall be sea fastened when necessary. Sea fastening is fixating the hoist trolley unit to prevent movement which could result in a damage.

The following measures shall be taken:

- Fixate the hoist trolley unit and its components by lashing or other means.
- Lift the load hook to its highest position.
- Make sure the load and hand chain is not able to swing. This can be achieved by tying the chain together or putting it in a chain bag or box.
- Make sure the chain bag or box is fixated.

Parking device
Standard headroom, low headroom and ultra low headroom hoist trolley units can optionally be executed with a single side parking device or parking pin. A single sided parking device is operated using a hand chain to press a locking disk against the monorail where a parking pin can be used to fasten the trolley using a hole in the monorail.

5 Installation

Warning! Installation may only be carried out by competent persons!

Tip! The position numbers mentioned in this chapter are according to the illustration of chapter 3.9 "Product overview".

Unpacking
Before installation, the hoist trolley unit shall be unpacked from its packing.

- Keep any accompanying documents near the operating site of the hoist trolley unit.
- Lift the hoist trolley unit carefully out of the packing and put it down on a stable underground.
- Keep in mind the weight of the hoist trolley unit. The standard weight with 3 meters lift can be found in chapter 3.9 "Product overview and dimensions". For the weight of a hoist trolley unit with deviating specifications, consult the technical specifications of the hoist trolley unit.
- Dispose or recycle the packaging materials in accordance with statutory legislation and environmental regulations.

Prior checks to Installation
Before installation of an hoist trolley unit, pay attention to the following.

- Check that the supporting structure is properly designed and dimensioned to hold the hoist trolley unit, the safe working load and any overload which might occur.
- Remove all obstacles that makes installation of the hoist trolley unit difficult.

Adjusting the trolley width
Standard headroom hoist trolley units executed with an adjustable suspension set are capable of adjustment to fit a range of monorail widths. For reference, see pos. 4, 5 and 7 of chapter 3.9 "Product overview". To adjust the width of a standard headroom hoist trolley unit, follow below steps in sequence.

- Detach the hoist from the trolley and put it down on a stable underground.
- Unscrew the support and suspension bolts (Pos. 4 and 5), on both sides of the trolley and take off the hexagon lock nuts and washers (Pos. 6 and 7).
- Slide off the side plate (Pos. 2). Be careful not to damage the threaded ends of the support and suspension bolts.
- Adjust the amount of washers on the inside and outside of the side plate. This increases or decreases the width of the trolley.
  Attention! On both sides of the support and suspension bolts shall be an equal amount of washers. If with an equal amount of washers the desired width cannot be set, then a difference of maximum 1 washer is allowed.
- Place the washers and hexagon lock nut (Pos. 6 and 7) onto the threaded ends of the support and suspension bolts and hand tighten the hexagon lock nuts.
- Measure the width between the wheel flanges. The trolley width shall be the width of the monorail (BW) + 2mm. keep increasing or decreasing the amount of washers until the correct width is reached.
- Tighten the support and suspension bolts according to chapter 8.4 "Tightening torques".
- Attach the hoist back to the trolley.
  Attention! After reassembly, it must be verified that the hoist trolley unit is properly mounted and all bolts are tightened according to chapter 8.4 "Tightening torques". Verification shall be performed by a competent person.
- Lift the hoist up to the trolley.

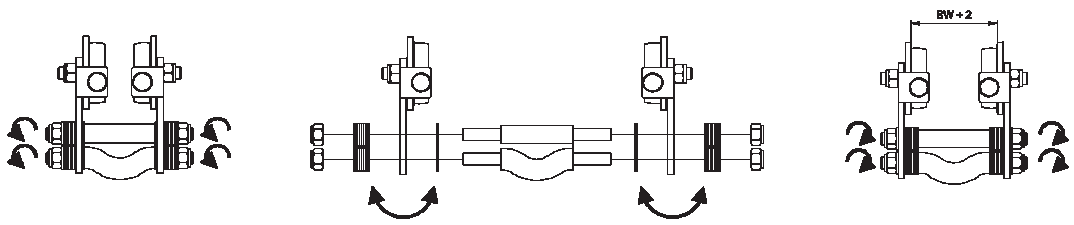

Installation

Depending on the situation, the hoist trolley unit can be installed in two ways. Option A is recommended and preferred because of the ease of installation. If the ends of the monorail aren't accessible, due to a wall or other obstacles, follow option B instead of option A. To install the hoist trolley unit properly, the following steps shall be taken in sequence.

Option A, Driving the hoist trolley unit onto the monorail:

- Use a double sling chain of sufficient capacity when lifting the hoist trolley unit.
- Remove the end stops from the monorail.
- Lift the hoist trolley unit next to the end of the monorail with the underside of the wheels just above the bottom flange of the monorail.
  Attention! Watch for the orientation of the hoist trolley unit.
- Push the hoist trolley unit onto the monorail.
- Reinstall the end stops onto the monorail.

Option B, Demount and lift the hoist trolley unit onto the monorail:

Standard headroom

To install a standard headroom hoist trolley unit, the trolley shall be partly disassembled, lifted up to the monorail and reassembled using the following steps.

- Loosen the support and suspension bolts (Pos. 4 and 5) on one side of the trolley.
- Unscrew the support and suspension bolts on the other side of the trolley and take off the hexagon lock nut and washers (Pos. 6 and 7).
- Slide off the side plate (Pos. 2). Be careful not to damage the threaded ends of the support and suspension bolts.
- Lift the trolley half containing the support and suspension bolts onto the monorail flange.
  Attention! Watch for the orientation of the trolley.
- Slide the side plate (Pos. 2) back onto the support and suspension bolts (Pos. 4 and 5). Be careful not to damage the threaded ends of the support and suspension bolts.
- Place the washers and hexagon lock nut (Pos. 6 and 7) onto the threaded ends of the support and suspension bolts and hand tighten the hexagon lock nuts.
- Tighten the support and suspension bolts according to chapter 8.4 "Tightening torques".
  Attention! After reassembly, it must be verified that the trolley is properly mounted and all bolts are tightened according to chapter 8.4 "Tightening torques". Verification shall be performed by a competent person.

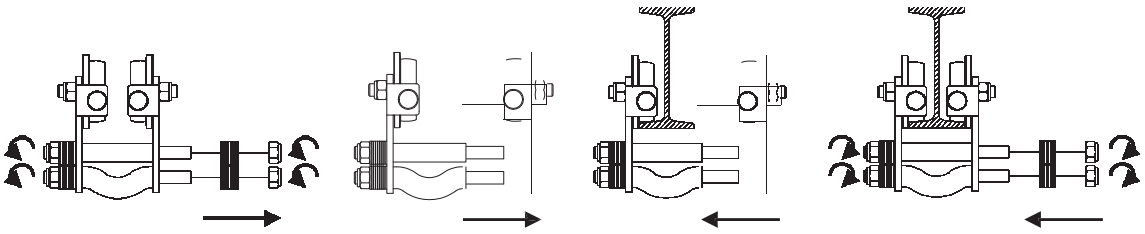

Low headroom and ultra low headroom

To install a low headroom or ultra low headroom hoist trolley unit, execute one of the following options.

Option B1,

- Remove all obstacles which prevent installation at the end of the monorail.
- Continue the installation procedure at option A

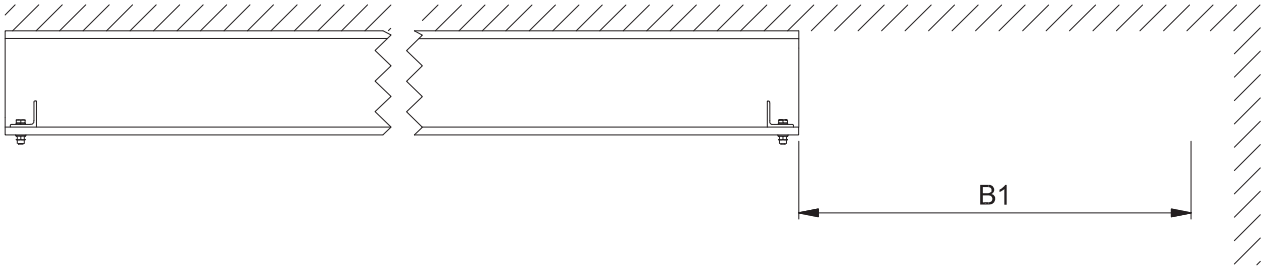

Option B2,

- Disassemble and remove a section of the monorail.
- Lift the hoist trolley unit next to the end of the monorail with the underside of the wheels just above the bottom flange of the monorail.
  Attention! Watch for the orientation of the hoist trolley unit.
- Push the hoist trolley unit onto the monorail.
- Reinstall the earlier removed section of the monorail.
- If disassembled, reinstall the end stops on the monorail.

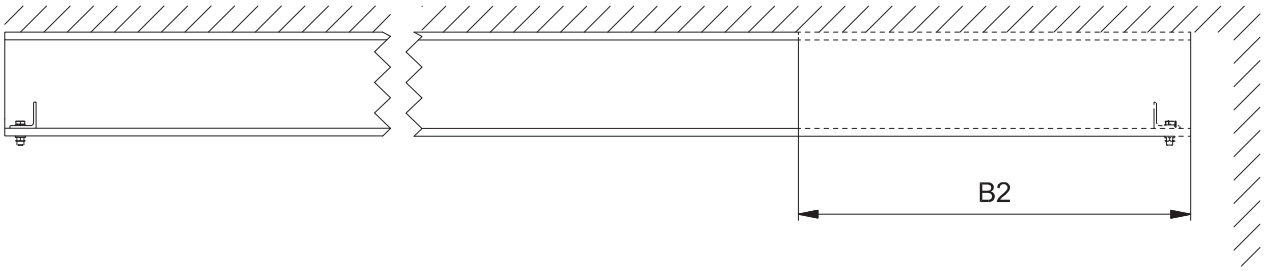

Option B3,

Preforming this step will make a section of the monorail permanently unusable. If this option is not desirable, follow option B4.

- Cut away the lower flange of a unused section of the monorail. Preferably at the end of the monorail.
- Lift the hoist trolley unit to just below the removed section.
- Slowly lift the hoist trolley until the monorail web is in between the wheels and the underside of the wheels are just above the bottom flange of the monorail.
  Attention! Watch for the orientation of the hoist trolley unit.
- Push the hoist trolley unit onto the monorail.
- Reinstall the end stops on the monorail just beyond the removed section.

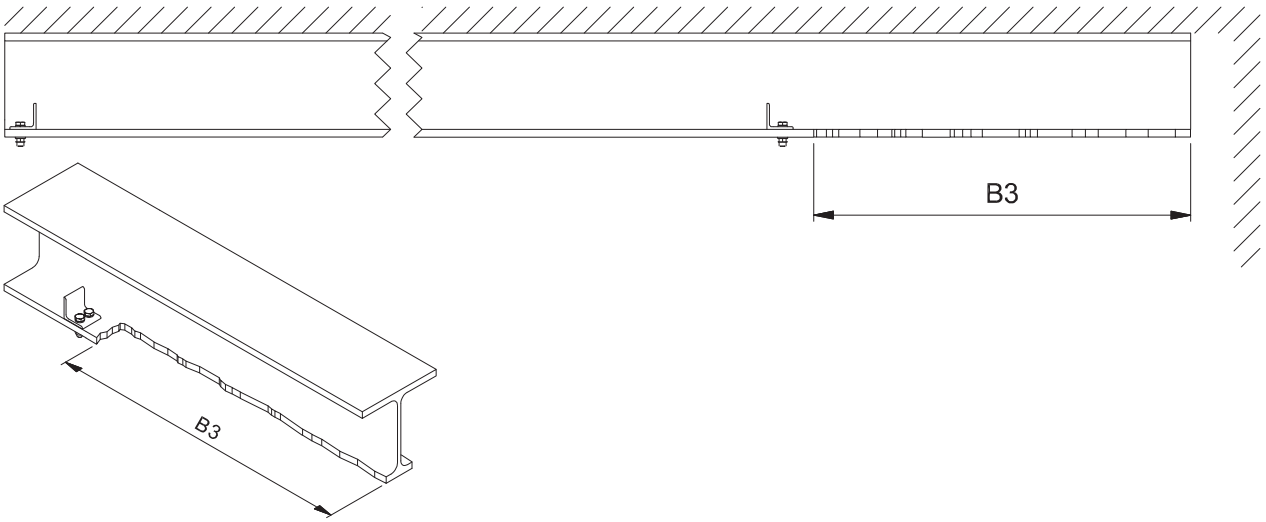

Option B4,

- For low headroom and ultra low headroom hoist trolley units, a special designed suspension set can be ordered to install the hoist trolley using the procedure as described in option B for a standard headroom hoist trolley unit.

After performing option A or B the following actions shall be taken:

- Check the position of the end stops on the monorail.
- Check if the safety latch is closed correctly.
- Check the lubrication of the hoist trolley unit according to chapter 8.2 "Lubrication list".

Attention! After installation, the hoist trolley unit shall be commissioned and load tested according to chapter 6 "Commissioning".

6 Commissioning

After installation, it is important to make sure that the complete system is functioning properly by following the next tests and checks in the correct order. The tests and checks before commissioning must also be executed when the system has been stored or has been out of operation for a period longer than 3 months.

Warning! Commissioning and load tests may only be carried out by competent persons.

Attention! Below test and checks are to be performed without load.

Checks before commissioning

Before commissioning, check the following steps.

- Visual check that installation of the hoist trolley unit is performed correctly.
- Remove all obstacles that makes commissioning of the hoist trolley unit difficult.
- Check tightening of all bolted connections. For reference see chapter 8.4 "Tightening torques".
- Check if the end stops are properly mounted onto the monorail.
- Visually check if monorail is clean and without obstacles.

Checks during commissioning

During commissioning, perform, test and check the following steps.

- Always ensure that there is enough space for travelling, lifting and lowering without the risk of collision with obstacles.
- Check all movements. All movements must be smoothly and without any abnormal noises or vibrations.
- Register the results if necessary.

Load tests

The hoist trolley unit should be function- and load tested as a complete system according to the directives given in NEN-EN 15011 before putting into operation for the first time.

Safe Working load (S.W.L.), in metric ton	Test load
Up to 20 ton	125% S.W.L.
Exceeding 20 ton but not exceeding 50 ton	S.W.L. + 5 ton
Exceeding 50 ton	110% S.W.L.

Commissioning table 1

In addition to the above, observe the national rules and regulations of the country in which the hoist trolley unit is used.

7 Operation

This chapter gives a short description on how to operate hoist trolley unit.

Attention! Before operating an hoist trolley unit:
- Read chapter 2 "Safety instructions"
- See section "Before use" of chapter 8.1 "Maintenance schedule".

Personal protective equipment

Personal protective equipment shall be provided by the owner and shall be used where necessary.
- Ear and eye protection.
- Safety boots and protective gloves.
- Closely fitting clothes (danger of clothing being drawn into equipment).
- Head protection

Working environment
- The operator must always have a clear sight on the working environment.
- Movements of the load in all directions must be clearly visible.
- Clean up disturbing objects.
- The operator must not stand in the hazardous area.

Prior to operation

Each operator must have read the entire manual and fully understand its contents. It is the responsibility of the operator to observe and follow everything that is described in this manual.

Pulling force hand chain in kilograms

* The hand chain pulling force of pulling force table 1 and 2, does not comply with NEN-EN 13157 chapter 5.1.6 "Operating effort".

Capacity			Standard headroom			Low headroom		
	Hoist model		Trolley	Hoist		Trolley	Hoist	
kg	N	K		N *	K *		N *	K *
500	N005	K005	-	21	24	-	21	24
1.000	N010	K010	10	24	29	10	24	29
1.500	-	K015	16	-	35	16	-	35
1.600	N016	-	16	29,5	-	-	-	-
2.000	N020	K020	16	33,5	36	16	33,5	36
2.500	-	K025	20	-	33	20	-	33
3.000	-	K030	20	-	36	20	-	36
3.200	N032	-	20	38	-	20	38	-
5.000	N050	K050	20	36	34	20	36	34
7.500	-	K075	16	-	35	16	-	35
10.000	N100	K100	19	43	36	19	43	36
15.000	-	K150	20	-	37	-	-	-
16.000	N160	-	20	47	-	-	-	-
20.000	N200	K200	25	45x2	36x2	-	-	-
25.000	N250	-	25	44x2	-	-	-	-
30.000	-	K300	-	-	43x2	-	-	-
32.000	N320	-	-	47x2	-	-	-	-
40.000	N400	K400	-	46x2	43x2	-	-	-
50.000	N500	K500	-	47x2	49x2	-	-	-

Pulling force table 1

Capacity			Ultra Low Headroom		
	Hoist model		Trolley	Hoist	
kg	N	K		N *	K *
1.000	N005	K005	13	21	24
2.000	N010	K010	18	24	29
3.000	-	K015	17	-	35
3.200	N016	-	18	29,5	-
5.000	-	K025	16	-	33
6.300	N032	-	20	38	-
10.000	-	K025	26	-	33
12.000	N032	-	30	38	-

Pulling force table 2

Operating an hoist trolley unit
Manual push and manual geared trolleys are intended to be operated by hand.

Manual push trolleys are not equipped with a drive mechanism and shall be pushed by hand. Manual geared trolleys are driven by a hand chain. Pulling the left hand chain part down causes the trolley to drive forwards as shown in detail A of the illustration below. Pulling the other chain part down will result in driving the trolley backward.

Hoists shall always be operated by hand. Any other drive mechanism is not allowed. Pulling the right hand chain part down causes the hoist to lift the hook as shown in detail B of the illustration below. Pulling the other chain part down will result in lowering the hook.

The above explanation applies to standard headroom, low headroom and ultra low headroom hoist trolley units.

Caution! Only pull the chain on the straight ends. Getting your hands in the bottom of the loop while pulling fast or firmly may hurt.

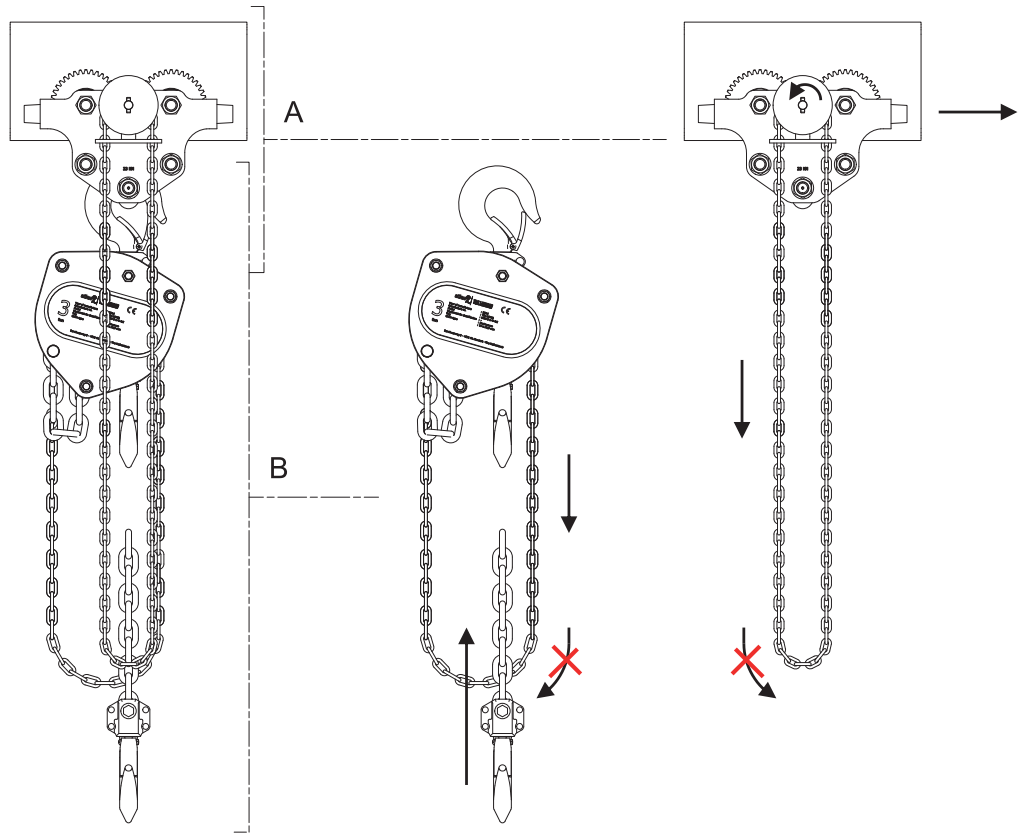

8 Maintenance

In this chapter the maintenance, lubrication and torques are given.

- **Warning!** Maintenance, inspection and damage assessment may only be executed by competent maintenance personnel.
- Malfunctions have to be reported immediately, to the owner, who has to initiate repair work, which is to be carried out by competent maintenance personnel.
- All maintenance, measurements, shortcomings, damages and repairs must be written in a logbook.

- **Warning!** Repair work may only be performed when the equipment is out of service.

- **Warning!** Parts must always be replaced when damage occurs that directly or indirectly endangers the safety of the hoist trolley unit.

8.1 Maintenance schedule

The following regular maintenance intervals are for reference. Regular maintenance work must be adapted to the service conditions if the product is used in higher than normal service conditions.

K = Model K hoist trolley unit
N = Model N hoist trolley unit

Maintenance table 1 shall be followed for regular maintenance.

Maintenance and checks	Daily / Before use		Monthly		3 monthly		Yearly	
	K	N	K	N	K	N	K	N
Visually check if the load chain is clean and not twisted	x	x						
Visually check if the hand chain is clean and not twisted	x	x						
Check operation of hoist brakes					x	x		
Check pinions and gears for wear			x	x				
Lubricate pinions and gears							x	x
Check the load chain and lubricate if necessary					x	x		
Check the guide rollers and lubricate if necessary					x	x		
Check the hoist and trolley structure for deformation							x	x
Check trolley wheels for wear							x	x
Check gearboxes for oil leakage	x	x						
Lubricate wheels, guide wheels and pillow block bearings					x	x		
Check all fasteners							x	x
Check all locking components (fixing plates, circlips, etc.)							x	x
Change gearbox oil							x	x
Check hook for wear, see chapter 8.6 “Hook”	x	x	x	x				
Check load chain for wear, see chapter 8.5 “Chain”	x	x	x	x				
Check hand chain for wear, see chapter 8.5 “Chain”							x	x
Check for wear on the hoist body load chain entrance							x	x
Check for wear on the hoist body hand chain entrance							x	x
Visually check the hook safety latch	x	x						
Check condition and suspension of the chain bag or box							x	x
Check for any kind of corrosion or oxidation			x	x				
Visually check the overall condition of the hoist	x	x						
Check the overload protection device with 125% S.W.L.							x	x

Maintenance table 1

When the hoist trolley unit is going to be taken out of operation for a period longer than one month, follow maintenance table 2. Taking out of service for a period longer than six months is considered as storage for which maintenance table 3 should be used.

Maintenance when taking out of operation	Before		Monthly		3 monthly		Before re-use	
	K	N	K	N	K	N	K	N
Rotate all bearing and shafts	x	x			x	x		
Fill all gearboxes generously with oil	x	x						
Lubricate wheels, guide wheels and pillow block bearings	x	x						
Lubricate pinions and gears	x	x			x	x		
Visually check if the load chain is clean	x	x						
Visually check if the hand chain is clean	x	x						
Check for any kind of corrosion or oxidation			x	x			x	x
Visually check the overall condition of the hoist trolley unit	x	x					x	x
Check gearboxes for oil leakage	x	x	x	x			x	x

Maintenance table 2

Maintenance before, during and after storage	Before		6 Monthly		2 Yearly		Before re-use	
	K	N	K	N	K	N	K	N
Rotate all bearing and shafts	x	x			x	x		
Fill all gearboxes generously with oil	x	x						
Lubricate wheels, guide wheels and pillow block bearings	x	x						
Lubricate pinions and gears	x	x			x	x		
Visually check if the load chain is clean	x	x						
Visually check if the hand chain is clean	x	x						
Lubricate the load chain	x	x						
Lubricate the hand chain (corrosion prevention)	x	x						
Clean off any lubrication of the hand chain							x	x
Check condition and suspension of the chain bag or box							x	x
Check for any kind of corrosion or oxidation			x	x			x	x
Visually check the overall condition of the hoist trolley unit	x	x					x	x
Check gearboxes for oil leakage	x	x	x	x			x	x

Maintenance table 3

Load tests
When a structural or load carrying component has been repaired or replaced during maintenance, the hoist trolley unit shall be load tested according to chapter 6 "Commissioning".

8.2 Lubrication list

The following table has to be used in combination with chapter 8.3 "Lubrication codes".

Component	Lubrication code
Pinions	9
Gearbox (Spur and helical)	8
Gearbox (Worm)	4
Gearbox (Planetary)	14
Load chain	15
Bearings, grease nipples and wheels	12

Lubrication table 1

Attention! While lubricating the load chain, ensure that the lubricant also gets into the chain interlink joints where they are subject to wear.

8.3 Lubrication codes

Attention! Before use of any lubrication, read the Material Safety Data Sheet (MSDS) and Technical or Product Data Sheet (TDS or PDS).

Attention! Always use Personal Protective Equipment (PPE) as described in the Material Safety Data Sheet (MSDS).

Below lubricants are used and/or recommended lubricants. To select the right lubricant, see lubrication table 1 of chapter 8.2 "Lubrication list".

Lubricant code	Oil / Grease	Lubricant	Ambient Temperature °C	ISO-Viscosity	Kinematic viscosity mm2/s @40°C	Fire point DIN ISO 2592 °C	Pour point DIN ISO 3016 °C	Penetration worked @25°C 0.1 mm	Dropping point °C
1	Oil	Shell Tellus S2 M 46	-20 +100	46	46	230	-30	-	-
2	Oil	Shell Omala S2 G 320	0 +100	320	320	250	-15	-	-
3	Oil	Shell Omala S4 GX 320	-25 +120	320	312,7	252	-42	-	-
4	Oil	Shell Omala S4 WE 220	-20 +100	220	222	278	-39	-	-
5	Oil	Shell Omala S4 WE 320	-20 +100	320	321	270	-39	-	-
6	Oil	Shell Omala S4 WE 460	-20 +100	460	460	268	-36	-	-
7	Oil	Shell Omala S4 WE 680	-20 +100	680	664	262	-39	-	-
8	Oil	Shell Omala S4 GX 220	-30 +120	220	229,4	250	-45	-	-
9	Grease	Shell Gadus S3 Wirerope T Aerosol	-30 +120	-	345	-	-	445-475	-
10	Grease	Shell Gadus S2 A320 2	-10 +60	-	320	-	-	265-295	85
11	Oil	Castrol Viscogen KL300 Spray	0 +200	-	4030	-	-12	-	-
12	Grease	Shell Gadus S3 V220C 2	-20 +140	-	220	-	-	265-295	240
13	Grease	Bel-Ray Wirerope 66700	-46 +60	-	14,2	-	-	-	-
14	Oil	Q8 Goya 150	-20 +100	150	150	-	-27	-	-
15	Oil	Castrol Viscogen KL130 Spray	-20 +200	-	249	-	-27	-	-

Lubrication table 2

8.4 Tightening torques

Tightening torques of fasteners in components such as motors gearboxes etc. should be tightened according the manufactures documentation. Other fasteners are according to below tables.

Normal bolt nut connections shall be fastened according to torque table 1. All custom threads (For example support and suspension bolts, wheel shafts, guide roller shafts, etc.) shall be fastened according to torque table 2.

All bolts are of 8.8 quality unless otherwise noted.

Torque (Nm)	8.8	10.9	12.9	A4-70	A4-80
M3	2,1	3,5	3,8	1,5	1,7
M4	4,4	7	7,6	3	3,6
M5	8	12,5	13,6	5,5	6,7
M6	13,2	20,1	21,8	8,1	11,2
M8	30	44	47	18	21
M10	49	73	93	26	34
M12	83	121	151	41	62
M14	131	188	232	68	101
M16	167	281	342	108	157
M18	275	388	467	157	224
M20	382	534	638	223	318
M22	517	719	852	310	438
M24	652	902	1.064	397	558
M27	945	1.297	1.519	589	823
M30	1.286	1.755	2.042	815	1.132
M33	1.722	2.340	2.710	-	-
M36	2.219	3.003	3.463	1.445	1.993
M39	2.852	3.845	4.415	-	-
M42	3.525	4.740	5.429	-	-

Torque table 1

Torque (Nm)	
M8	13
M10	26
M12	45
M16	110
M20	210
M24	365
M30	725
M36	1.265
M39	1.545
M42	1.890

Torque table 2

8.5 Chain

Load chains last very long under normal usage conditions, but wear is unavoidable. Below tables shows the dimensions of a new load chain which must be used to determine the actual wear.

Capacity			Standard Headroom				Low Headroom			
	Model		N		K		N		K	
kg	N	K	Ød	1P	Ød	1P	Ød	1P	Ød	1P
500	N005	K005	5	15	5	15	5	15	5	15
1.000	N010	K010	6,3	19,1	6,3	19	6,3	19,1	6,3	19
1.500	-	K015	-	-	7,1	21	-	-	7,1	21
1.600	N016	-	7,1	21,2	-	-	7,1	21,2	-	-
2.000	N020	K020	8	24	8	24	8	24	8	24
2.500	-	K025	-	-	9	27	-	-	9	27
3.000	-	K030	-	-	7,1	21	-	-	7,1	21
3.200	N032	-	10	30,2	-	-	10	30,2	-	-
5.000	N050	K050	7,1	21,2	9	27	7,1	21,2	9	27
7.500	-	K075	-	-	9	27	-	-	9	27
10.000	N100	K100	10	30,2	9	27	10	30,2	9	27
15.000	-	K150	-	-	9	27	-	-	9	27
16.000	N160	-	10	30,2	-	-	-	-	-	-
20.000	N200	K200	10	30,2	9	27	-	-	-	-
25.000	N250	-	10	30,2	-	-	-	-	-	-
30.000	-	K300	-	-	9	27	-	-	-	-
32.000	N320	-	10	30,2	-	-	-	-	-	-
40.000	N400	K400	10	30,2	9	27	-	-	-	-
50.000	N500	K500	10	30,2	9	27	-	-	-	-
Hand chain hoist			5	24	5	25,2	5	24	5	25,2
Hand chain trolley			5	18,5	5	18,5	5	18,5	5	18,5

Load chain table 1

Capacity			Ultra Low Headroom			
	Model		N		K	
kg	N	K	Ød	1P	Ød	1P
1.000	N005	K005	5	15	5	15
2.000	N010	K010	6,3	19,1	6,3	19
3.000	-	K015	-	-	7,1	21,2
3.200	N016	-	7,1	21,2	-	-
5.000	-	K025	-	-	9	27
6.300	N032	-	10	30,2	-	-
10.000	-	K025	-	-	9	27
12.000	N032	-	10	30,2	-	-
Hand chain hoist			5	24	5	25,2
Hand chain trolley			5	18,5	5	18,5

Load chain table 2

Inspection and lubrication

The entire length of the chain must be inspected, including those parts which are covered. Inspect for heavy corrosion, pitting corrosion and wear on the chain links, especially at the inner rounding's of the link. The entire length of the chain shall be lubricated at regular intervals according to chapter 8.1 “Maintenance schedule”.

Wear criteria

The chain must be replaced when one of the following criteria is fulfilled.

- Plastic deformation of a chain link as a result of tensile or bending forces.
- Reduction of the average wire diameter at any point on the chain link of more than 10% of the nominal thickness. Average wire diameter = (d1 + d2) / 2. The average wire diameter shall be calculated using two individual measurements, d1 and d2, made at an angle of 90° with respect to each other.
- An increase in the chain pitch 1P of more than 5% of the original pitch.
- An increase in the chain pitch 11P of more than 2% of the original pitch.
- Sharp edges, notches or cracks in the surface of the chain.

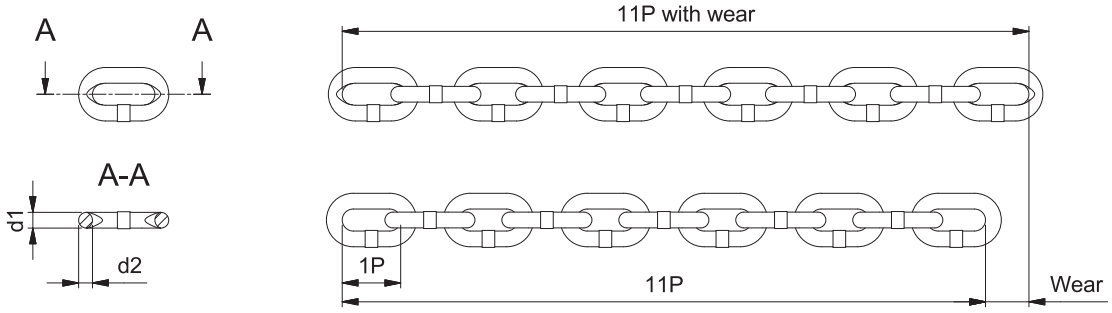

8.6 Hook

When the load hook is subjected to normal usage conditions, it will last a long time with minimal wear. Below illustration and hook table 1, 2 and 3 shows the dimensions of a new hook which must be used to determine the actual wear.

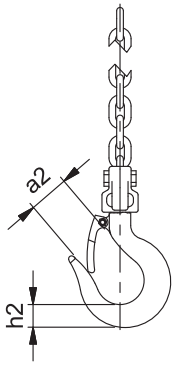

The load must always be suspended from the base of the hook. If tip of the hook is subjected to load, an increase of value a2 is likely to occur as a result of tensile or bending forces.

A hook can quickly wear due to improper load attachment and/or overload. In order to reduce wear and extending the service life of the hook, read chapter 2.6 "Proper load attachment / suspension".

Capacity			Standard Headroom							
	Model		N				K			
kg	N	K	a2	$a2_{max}$	h2	$h2_{min}$	a2	$a2_{max}$	h2	$h2_{min}$
500	N005	K005	30	33	16,8	15,1	31,1	34,2	17	15,3
1.000	N010	K010	36	39	21,6	19,5	34,6	38,1	21,8	19,6
1.500	-	K015	-	-	-	-	38,8	42,7	26,5	23,9
1.600	N016	-	39	43	27,3	24,6	-	-	-	-
2.000	N020	K020	42	46	30,5	27,5	40	44	30	27
2.500	-	K025	-	-	-	-	42,5	46,8	33,5	30,2
3.000	-	K030	-	-	-	-	46	50,6	37,5	33,8
3.200	N032	-	48	53	36,8	33,1	-	-	-	-
5.000	N050	K050	56	60	45,3	40,8	50	55	47,5	42,8
7.500	-	K075	-	-	-	-	79,5	87,5	63	56,7
10.000	N100	K100	75	80	63	56,7	79,2	87,1	63	56,7
15.000	-	K150	-	-	-	-	94,6	104,1	80	72
16.000	N160	-	90	97	70,8	63,7	-	-	-	-
20.000	N200	K200	90	97	89,2	80,3	95,7	105,3	90	81
25.000	N250	-	90	97	89,2	80,3	-	-	-	-
30.000	-	K300	-	-	-	-	118,1	129,9	112	123,2
32.000	N320	-	90	97	89,2	80,3	-	-	-	-
40.000	N400	K400	120,9	133	155	139,5	108,8	119,7	133	119,7
50.000	N500	K500	131	144,1	170	153	120,9	133	155	139,5

Hook table 1

Capacity			Low Headroom							
	Model		N				K			
kg	N	K	a2	$a2_{max}$	h2	$h2_{min}$	a2	$a2_{max}$	h2	$h2_{min}$
500	N005	K005	30	33	16,8	15,1	31,1	34,2	17	15,3
1.000	N010	K010	36	39	21,6	19,5	34,6	38,1	21,8	19,6
1.500	-	K015	-	-	-	-	38,8	42,7	26,5	23,9
2.000	N020	K020	42	46	30,5	27,5	40	44	30	27
2.500	-	K025	-	-	-	-	42,5	46,8	33,5	30,2
3.000	-	K030	-	-	-	-	46	50,6	37,5	33,8
3.200	N032	-	48	53	36,8	33,1	-	-	-	-
5.000	N050	K050	56	60	45,3	40,8	50	55	47,5	42,8
7.500	-	K075	-	-	-	-	79,5	87,5	63	56,7
10.000	N100	K100	75	80	63	56,7	79,2	87,1	63	56,7
15.000	-	K150	-	-	-	-	94,6	104,1	80	72

Hook table 2

Capacity			Ultra Low Headroom							
	Model		N				K			
kg	N	K	a2	$a2_{max}$	h2	$h2_{min}$	a2	$a2_{max}$	h2	$h2_{min}$
1.000	N005	K005	36	39	21,6	19,5	34,6	38,1	21,8	19,6
2.000	N010	K010	42	46	30,5	27,5	40	44	30	27
3.000	-	K015	-	-	-	-	46	50,6	37,5	33,8
3.200	N016	-	48	53	36,8	33,1	-	-	-	-
5.000	-	K025	-	-	-	-	40	44	40	36
6.300	N032	-	45	49,5	48	43,2	-	-	-	-
10.000	-	K025	-	-	-	-	50	55	58	52,2
12.000	N032	-	50	55	58	52,2	-	-	-	-

Hook table 3

Lubrication

Model N hoists with a capacity of 5 ton or larger have a factory pre-greased hook pivot bearing which usually requires no maintenance during its entire service life.

Attention! If necessary, the hook pivot bearing may only be greased in the factory of PLANETA.

Inspection

The both hooks and hook blocks must be checked for damage and wear using the following criteria.

- Check for deformations, cracks and/or cuts caused by an impact.
- The hook safety latch must close completely using its own spring, without human assistance.
- The hook pivot bearing of model N hoists with a capacity of 5 ton or larger must be able to rotate freely.
- The hook capacity must be readable.
- Inspect the hook and its parts for heavy corrosion and/or pitting corrosion.

Replacement state of wear

The hook must be replaced when one of the following criteria is fulfilled.

- An increase of value a2 due to plastic deformation as a result of tensile or bending forces.
- An increase of value a2 of more than 10% of the nominal dimensions due to wear. If value $a2_{max}$ is reached then hook must be replaced.
- A reduction of value h2 due to plastic deformation as a result of tensile or bending forces.
- A reduction of value h2 of more than 10% of the nominal dimensions due to wear. If value $h2_{min}$ is reached then hook must be replaced. Notches and/or other imperfections shall be ground smooth before measuring.
- Cracks in the surface of the hook.
- Any deformation which can be visually noticed. For example, as shown in the illustration to the right.

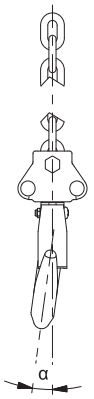

9 Malfunctions

Hoist trolley units last very long without malfunctions when maintenance is regularly preformed, but malfunctions are is unavoidable. Below table shows malfunctions which might occur.

- When a malfunction has been found it has to be reported immediately, to the owner, who has to initiate repair work, which is to be carried out by competent maintenance personnel.
- All malfunctions and repairs must be written in a logbook.
- **Warning!** Repair work may only be performed when the equipment is out of service.
- **Warning!** Parts must always be replaced when damage occurs that directly or indirectly endangers the safety of the hoist.

Malfunction	Cause	Explanation	Remedy
The pawl makes a proper clicking sound but fails to lift the load.	Worn friction plates.	When the hoist is frequently used, the friction plates will wear. This results in gaps between the friction disk, bushing and hand chain wheel causing the brake to slip.	Replace the friction plates and bushing.
	The braking surface is dirty or oily causing the load to slip.	The braking surface shall be clean and free of lubricants because it is a dry-type brake.	Clean the braking surface or if necessary, replace the brake and its components.
The pawl cannot be heard and fails to lift the load.	The pawl has been improperly assembled.	If the pawl is assembled incorrectly, it will not properly mesh with the ratchet disk.	Reassemble the pawl and its components.
	The pawl is not moving smoothly.	Dirt has accumulated on the grease of the pawl and pawl shaft. Movement will become sluggish or the pawl remains stuck in the kicked out position.	Reassemble the pawl and its components and replace the lubricant.
Excessive hand chain force is needed to lift the load. A squeaking noise can possibly be heard.	Worn gear teeth. Worn or damaged bearing.	Dirt has accumulated resulting in wear, damage and improper meshing of gears.	Replace the pinion, gear, load gear, gear case, side plate and bearings.
Jerky lowering or excessive hand chain force is needed to lower the load.	The brake is too tight.	As a result of a shock during operation or because a load was suspended for a long period of time, the brake tightened.	Free the brake forcibly by jerking the hand chain.
	The brake is rusted.	The brake hasn't be cleaned correctly during maintenance.	Clean the braking surface or if necessary, replace the brake and its components.
The hoist drops the load immediately when lowering is started.	The braking surface is dirty or oily causing the load to slip.	The braking surface shall be clean and free of lubricants because it is a dry-type brake.	Clean the braking surface or if necessary, replace the brake and its components.

10 Taking out of operation

To keep the hoist trolley unit in good condition when taking out of service for a period longer than one month, follow the steps below.

Attention! If the hoist trolley unit is taken out of service for a period longer than six months read chapter 4 "Transport and Storage" section storage.

- The hoist trolley unit may only be taken out of operation in unloaded condition.
- Perform routine maintenance and maintenance for taking out of operation according to maintenance table 1 and 2 of chapter 8.1 "Maintenance schedule".
- The environment should be clean and dry.
- If necessary, the hoist trolley unit shall be cleaned.
- The hoist trolley unit shall be kept free from excessive vibrations.
- The hoist trolley unit shall be protected against excessive water, wind and salt
- The hoist trolley unit shall be stored in a closed and/or sealed packing.
- Observe environmental protection laws (do not allow oil etc. to leak).

Model K
- Temperature not colder than -20°C or hotter than +40°C.

Model N
- Temperature not colder than -15°C or hotter than +40°C.

Dismantling

When an hoist trolley unit or its components have reached their end of service live, they shall be replaced or taken out of service. When taking an hoist trolley unit or its components out of service they shall be dismantled according to the instructions below.

Warning! Dismantling may only be carried out by competent persons!

Attention! Before dismantling:
- Read chapter 2 "Safety instructions".
- Read chapter 7 "Operation" for use of personal protective equipment.

Depending on the situation, the hoist trolley unit can be dismantled in two ways. If the ends of the monorail aren't accessible, due to a wall or other obstacles, follow option B instead of option A.

Option A, Driving the trolley off the monorail:
- Try to push the hoist trolley unit to the end of the monorail.
- Use a double sling chain of sufficient capacity when lifting the hoist trolley unit.
- Lift the hoist trolley unit off the end of the monorail.

Option B, Demount and lift the trolley off the monorail:
- Ensure that all parts of the hoist trolley unit are supported while disassembling.
- If applicable, open the safety latch of the top hook and lift the hoist down.
- Loosen on one side of the trolley the support and suspension bolts.
- Unscrew the support and suspension bolts on the other side of the trolley and take off the hexagon lock nut and washers.
- Slide off the side plate.
- Lift the trolley half containing the support and suspension bolts off the monorail.

Disposal

An hoist trolley unit and its components contain a range of materials which must be disposed or recycled, in according with statutory legislation and environmental regulations.

Please note that the following materials might have been used:
- Ferrous materials (Steel, Cast iron)
- Non-ferrous materials (Bronze, Aluminium, Copper)
- Plastics (Rubber, Cabling, Component housings)
- Oils and greases

11 Spare parts

This chapter shows the spare parts of an standard headroom, low headroom and ultra low headroom hoist trolley unit. Request for spare parts can be issued at your contact person at PLANETA using the manufacture number of the hoist trolley unit.

Warning! The use of non-original spare parts can lead to situations which are potentially dangerous to health and life.

Attention! The warranty will become invalid if the product is modified or non-original spare parts are used.

11.1 Standard headroom

Below illustration shows the spare part of an manual push and geared standard headroom hoist trolley unit and shall be used in combination with spare parts table 1 and 2.

Tip! The shown position numbers are in accordance with chapter 3.9.1 "Standard headroom".

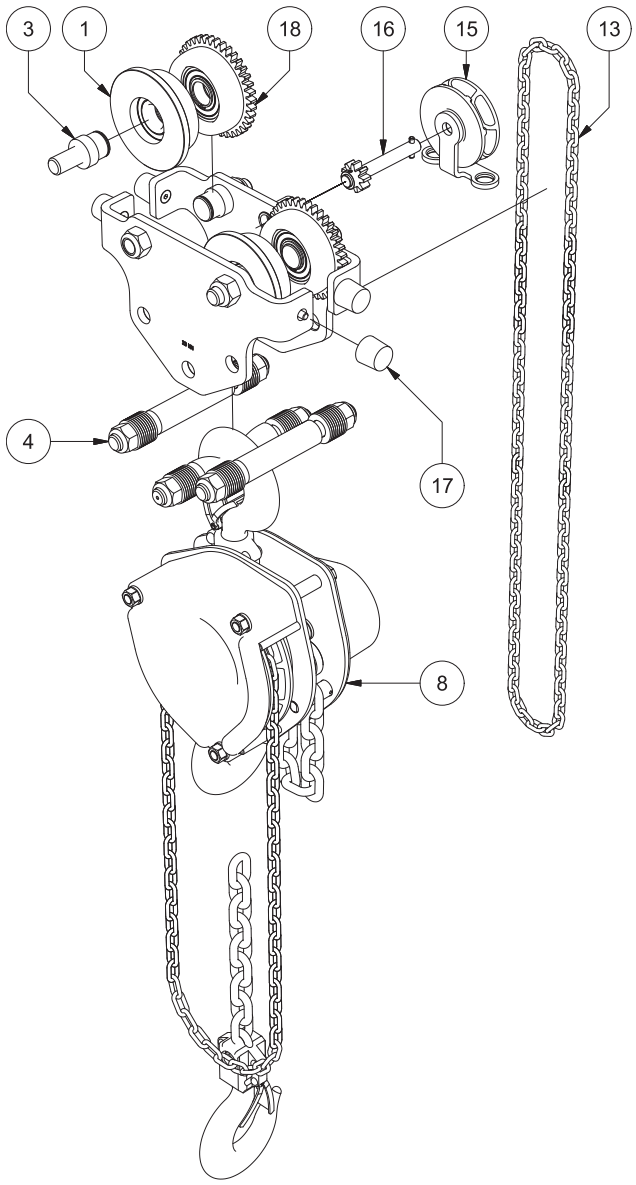

Standard headroom manual push 81000...

Pos.	Qty.	Consisting of	6 kN	11 kN	22 kN	33 kN	52 kN	64 kN
1	4	Single flange wheel Bearing Circlip						
3	4	Wheel shaft Hexagon lock nut Circlip						
4	1	Support bolt Suspension bolt Adjustment washer* Hexagon lock nut						
8	1	Hoist	See chapter 11.1.1 "Model K hoist" or 11.1.2 "Model N hoist".					
17	4	Buffer Hex head bolt						

Pos.	Qty.	Consisting of	84 kN	104 kN	124 kN	164 kN	204 kN	254 kN
1	4	Single flange wheel Bearing Circlip						
3	4	Wheel shaft Hexagon lock nut Circlip						
4	1	Support bolt Suspension bolt Adjustment washer* Hexagon lock nut						
8	1	Hoist	See chapter 11.1.1 "Model K hoist" or 11.1.2 "Model N hoist".					
17	4	Buffer Hex head bolt						

Spare parts table 1

*Only in combination with an adjustable suspension set.

Standard headroom manual geared 81200...

Pos.	Qty.	Consisting of	6 kN	11 kN	22 kN	33 kN	52 kN	64 kN
1	2	Single flange push wheel Bearing Circlip	-					
3	4	Wheel shaft Hexagon lock nut Circlip	-					
4	1	Support bolt Suspension bolt Adjustment washer* Hexagon lock nut	-					
8	1	Hoist	See chapter 11.1.1 "Model K hoist" or 11.1.2 "Model N hoist".					
17	4	Buffer Hex head bolt	-					
13	1	Hand chain	-					
15	1	Hand chain wheel Hand chain guide	-					
16	1	Drive shaft Pinion Spring pin	-					
18	2	Single flange geared wheel Bearing Circlip	-					

Pos.	Qty.	Consisting of	84 kN	104 kN	124 kN	164 kN	204 kN	254 kN
1	2	Single flange push wheel Bearing Circlip						
3	4	Wheel shaft Hexagon lock nut Circlip						
4	1	Support bolt Suspension bolt Adjustment washer* Hexagon lock nut						
8	1	Hoist	See chapter 11.1.1 "Model K hoist" or 11.1.2 "Model N hoist".					
17	4	Buffer Hex head bolt						
13	1	Hand chain						
15	1	Hand chain wheel Hand chain guide						
16	1	Drive shaft Pinion Spring pin						
18	2	Single flange geared wheel Bearing Circlip						

Spare parts table 2

*Only in combination with an adjustable suspension set.

11.1.1 Model K hoist

Below illustration and spare parts table 3 shows the spare parts of a model K hoist from 0,5 to 2,5 ton.

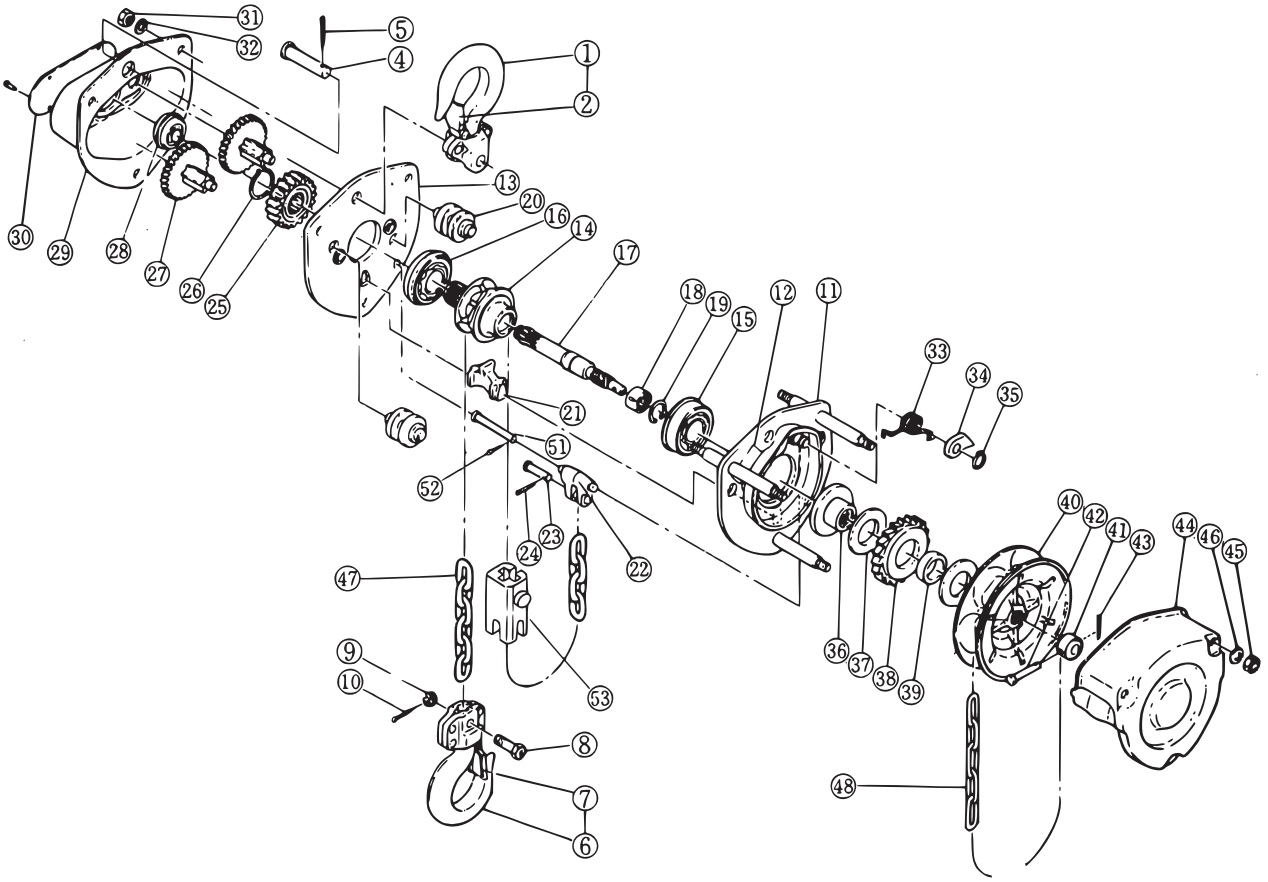

Pos.	Qty.	Consisting of	0,5 ton K005	1 ton K010	1,5 ton K015	2 ton K020	2,5 ton K025
1	1	Top hook set	C1FA005-1001	C1FA010-1001	C2FA015-1001	C3BA020-1001	C3BA025-1001
2	1	Hook latch assembly	C3BA005-1071	C1FA005-1071	C1FA010-1071	C1FA015-1071	C1FA020-1071
4	1	Top pin	C3BA005-9163	C3BA010-9163	C3BA015-9163	C3BA020-9163	C3BA025-9163
5	1	Split pin	J1PW01-030018		J1PW01-030025		
6	1	Bottom hook set	C3BA005-1021	C3BA010-1021	C3BA015-1021	C3BA020-1021	C3BA025-1021
7	1	Hook latch assembly	C3BA005-1071	C1FA005-1071	C1FA010-1071	C1FA015-1071	C1FA020-1071
8	1	Chain pin	C3BA005-9041	C3BA010-9041	C3BA015-9041	C3BA020-9041	C3BA025-9041
9	1	Slotted nut	C3BA005-9049	C3BA010-9049		C3BA020-9049	
10	1	Split pin	J1PW01-016010	J1PW01-020012		J1PW01-020014	
11	1	Side plate A assembly	C3BA005-5101	C3BA010-5101	C3BA015-5101	C3BA020-5101	C3BA025-5101
12	1	Name plate F	C3BA005-9806				
13	1	Side plate B assembly	C3BA005-5102		C3BA015-5102	C3BA025-5102	
14	1	Load sheave	C3BA005-9116	C3BA010-9116	C3BA015-9116	C3BA020-9116	C3BA025-9116
15	1	Ball bearing	J1GR002-06006			J1GR002-06007	
16	1	Ball bearing	J1GR002-06005		J1GR002-06006		J1GR002-06007
17	1	Pinion	C3BA005-9111	C3BA010-9111	C3BA015-9111	C3BA020-9111	C3BA025-9111
18	1	Roller bearing	C3BA005-9130			C3BA020-9130	
19	1	Snap ring	C3BA005-9118			C3BA020-9118	
20	2	Guide roller	C3BA005-9161	C3BA010-9161		C3BA020-9161	C3BA025-9161
21	1	Stripper	C3BA005-9162	C3BA010-9162	C3BA015-9162	C3BA020-9162	C3BA025-9162
22	1	Anchorage	C3BA005-9176	C3BA010-9176	C3BA015-9176	C3BA020-9176	C3BA025-9176
23	1	Stopper pin	C3BA005-9177	C3BA010-9177	C3BA015-9177	C3BA020-9177	C3BA025-9177
24	1	Splint pin	J1PW01-020012	J1PW01-025015			J1PW01-025018
25	1	Load gear	C3BA005-9114	C3BA010-9114	C3BA015-9114	C3BA020-9114	C3BA025-9114
26	1	Snap ring	J1SS000-00022		J1SS000-00028		J1SS000-00032
27	1	Gear #2 assembly	C3BA005-5122	-	-	-	-
	2		-	C3BA010-5122	C3BA015-5122	C3BA020-5122	C3BA025-5122
28	1	Ball bearing	J1GR002-6200			J1GR002-6201	

29	1	Gear case assembly	C3BA005-6103	C3BA010-6103	C3BA015-6103	C3BA020-6103	C3BA025-6103
30	1	Nameplate B	C3BG005-9800	C3BG010-9800	C3BG015-9800	C3BG020-9800	C3BG025-9800
31	3	Nut	J1NA001-20080			J1NA001-20100	J1NA001-20120
32	3	Spring washer	J1WS001-20080			J1WS001-20100	J1WS011-20120
33	1	Pawl spring set A & B	C3BA005-5179				
34	1	Pawl	C3BA005-9155				
35	1	Snap ring	J1SS000-00010				
36	1	Friction disc	C3BA005-9153			C3BA020-9153	
37	2	Friction plate	C3BA005-9151			C3BA020-9151	
38	1	Ratchet disk	C3BA005-9152			C3BA020-9152	C3BA005-9152
39	1	Bushing	C3BA005-9154			C3BA020-9154	
40	1	Hand wheel	C3BA005-9115		C3BA015-9115	C3BA020-9115	C3BA025-9115
41	1	Wheel stopper	C1FA005-9159			C1FA015-9159	
42	1	Wheel stopper pin	C3BA005-9167				
43	1	Split pin	J1PW01-020008				
44	1	Wheel cover assembly	C3BA005-5171		C3BA015-5171	C3BA020-5171	C3BA025-5171
45	3	Nut	J1NA001-20080				
46	3	Spring washer	J1WS001-20080				
47	1	Load chain	K7UN050-00000	K7UN063-00000	K7UN071-00000	K7UN080-00000	
48	1	Hand chain	K7NA050-00000				
115	1	Washer	C3BG005-9158				

Spare parts table 3

3 to 5 ton / K030 to K050

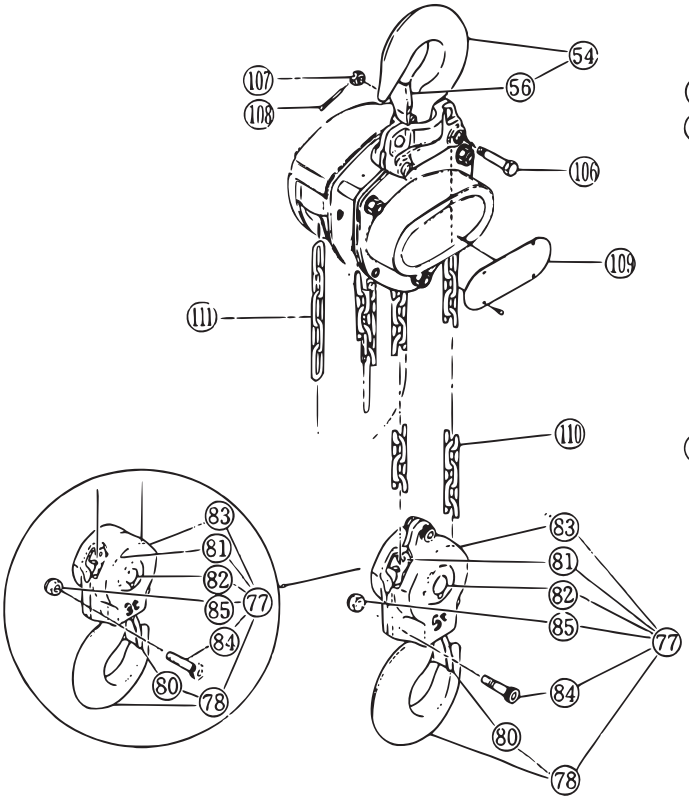

7,5 to 15 ton / K075 to K150

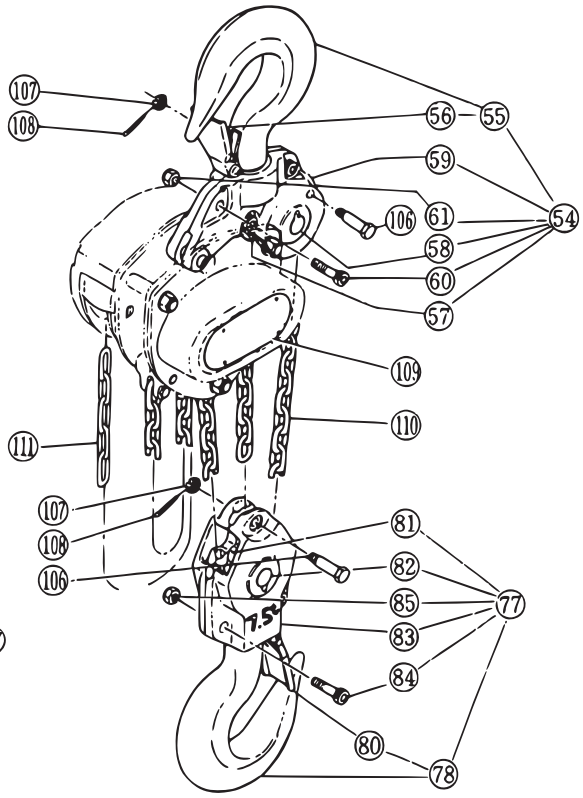

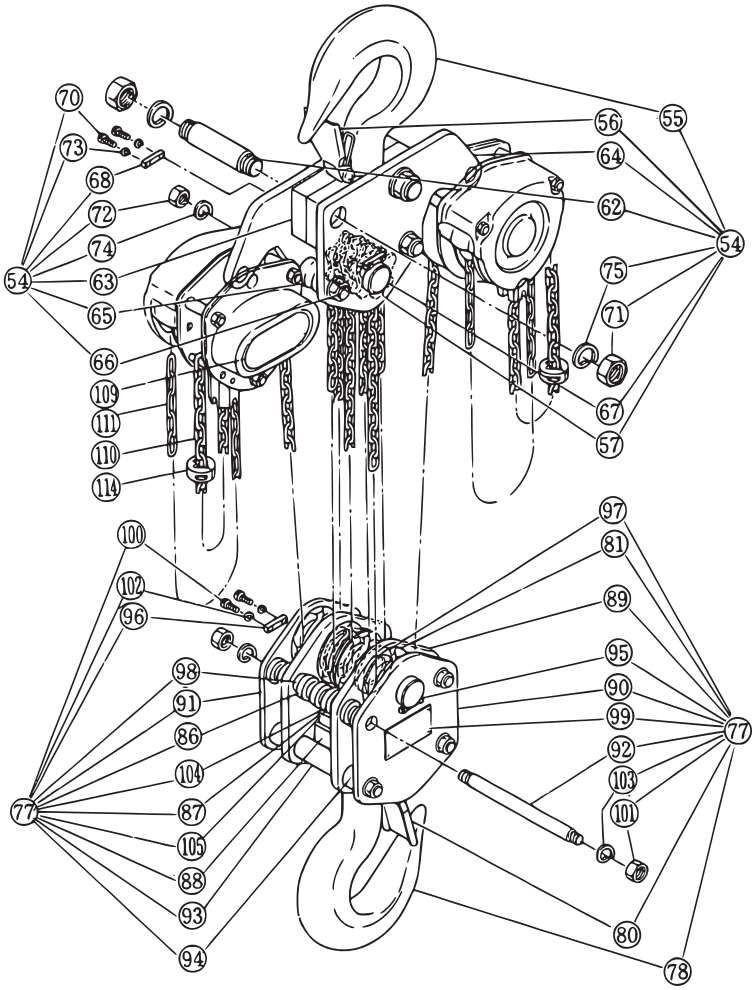

Spare parts table 4 in combination with the three previous illustrations shows the spare parts of a model K hoist from 3 to 20 ton.

Pos.	Qty.	Consisting of	3 ton K030	5 ton K050	7,5 ton K075	10 ton K100	15 ton K150	20 ton K200
4	1	Top pin	C3BA015-9163	C3BA025-9163				
5	1	Split pin	J1PW01-030025					
11	1	Side plate A assembly	C3BA015-5101	C3BA025-5101				
12	1	Name plate F	C3BA005-9806					
13	1	Side plate B assembly	C3BA015-5102	C3BA025-5102				
14	1	Load sheave	C3BA015-9116	C3BA025-9116				
15	1	Ball bearing	J1GR002-06006	J1GR002-06007				
16	1	Ball bearing	J1GR002-06006	J1GR002-06007				
17	1	Pinion	C3BA015-9111	C3BA025-9111				
18	1	Roller bearing	C3BA005-9130	C3BA020-9130				
19	1	Snap ring	C3BA005-9118	C3BA020-9118				
20	2	Guide roller	C3BA015-9161	C3BA025-9161				
21	1	Stripper	C3BA015-9162	C3BA025-9162				
22	1	Anchorage	C3BA015-9176	C3BA025-9176		-	-	-
23	1	Stopper pin	C3BA015-9177	C3BA025-9177		-	-	-
24	1	Splint pin	J1PW01-025015	J1PW01-025018		-	-	-
25	1	Load gear	C3BA015-9114	C3BA025-9114				
26	1	Snap ring	J1SS000-00028	J1SS000-00032				
27	2	Gear #2 assembly	C3BA015-5122	C3BA025-5122				
28	1	Ball bearing	J1GR002-6200	J1GR002-6201				
29	1	Gear case assembly	C3BA015-6103	C3BA025-6103				
31	3	Nut	J1NA001-20080	J1NA001-20120				
32	3	Spring washer	J1WS011-20080	J1WS011-20120				

33	1	Pawl spring set A & B	C3BA005-5179	C3BA005-5179				
34	1	Pawl	C3BA005-9155	C3BA005-9155				
35	1	Snap ring	J1SS000-00010	J1SS000-00010				
36	1	Friction disc	C3BA005-9153	C3BA020-9153				
37	2	Friction plate	C3BA005-9151	C3BA020-9151				
38	1	Ratchet disk	C3BA005-9152	C3BA005-9152				
39	1	Bushing	C3BA005-9154	C3BA020-9154				
40	1	Hand wheel	C3BA015-9115	C3BA025-9115				
41	1	Wheel stopper	C1FA005-9159	C1FA015-9159				
42	1	Wheel stopper pin	C3BA005-9167	C3BA005-9167				
43	1	Split pin	J1PW01-020008	J1PW01-020008				
44	1	Wheel cover assembly	C3BA015-5171	C3BA025-5171				
45	3	Nut	J1NA001-20080	J1NA001-20080				
46	3	Spring washer	J1WS011-20080	J1WS001-20080				
47	1	Load chain	K7UN071-00000	-	-	-	-	-
48	1	Hand chain	K7NA050-00000	-	-	-	-	-
51	1	End pin	-	-	-	C3BA100-9164		
52	1	Split pin	-	-	-	J1PW01-025018		
53	1	Cross guide	-	-	-	C3BA100-9176		

54	1	Top hook set	C3BA030-1001	C3BA050-1001	C3BA075-1001	C3BA100-1001	C3BA150-1001	C3BA200-1001
55	1	Top hook	-	-	C3BA100-2001		C3BA150-9001	C3BA200-9001
56	1	Hook latch assembly	C1FA020-1071	C1FA030-1071	P1VS200-10712		C2FA150-10711	C2FA200-10711
57	1	Idle sheave assembly	-	-	C3BA050-1051		-	-
	2		-	-	-	-	C3BA150-1051	-
	3		-	-	-	-	-	C3BA150-1051
58	1	Shaft assembly	-	-	C3BA050-5053		-	-
59A	1	Top yoke A	-	-	C3BA075-9011	C3BA100-9011	C3BA150-9016	-
59B	1	Top yoke B	-	-	C3BA075-9012	C3BA100-9012	C3BA150-9017	-
60	1	Socket bolt	-	-	-	J1BE1-120404	-	-
	5		-	-	J1BE1-120404	-	-	-
61	1	Lever nut	-	-	-	C2BA400-9074	-	-
	5		-	-	C2BA400-9074	-	-	-
-	2	Socket bolt	-	-	-	J1BE1-1606060	-	-
-	2	U nut	-	-	-	C3BA100-9087	-	-
62	2	Top suspension shaft	-	-	-	-	C3BA150-9010	C3BA200-9010
63	2	Top yoke	-	-	-	-	-	C3BA200-9011
64	1	Top plate A assembly	-	-	-	-	C3BA150-5012	C3BA200-5012
-	1	Top plate B	-	-	-	-	C3BA150-9014	-
65	4	Guide	-	-	-	-	C3BA150-9018	-
	6		-	-	-	-	-	C3BA150-9018
66	2	Stay bolt					C3BA150-9019	C3BA200-9019
-	1	Top plate	-	-	-	-	C3BA150-9043	-
67	1	Top shaft	-	-	-	-	C3BA150-9053	C3BA200-9053
68	2	Key plate	-	-	-	-	C2BA050-9056	
-	2	Collar	-	-	-	-	C3BA150-9066	-
70	4	Socket bolt	-	-	-	-	J1BE1-0801414	
71	4	Nut	-	-	-	-	J1NA001-10300	
72	4	Nut	-	-	-	-	J1NA001-10200	
73	4	Spring washer	-	-	-	-	J1WS011-20080	
74	4	Spring washer	-	-	-	-	J1WS011-20200	
75	4	Spring washer	-	-	-	-	J1WS011-20300	
77	1	Bottom hook set	C3BA030-1021	C3BA050-1021	C3BA075-1021	C3BA100-1021	C3BA150-1021	C3BA200-1021
78	1	Bottom hook	C3BA030-2021	C3BA050-2021	C3BA075-2021	C3BA100-2021	C3BA150-2021	C3BA200-2021
80	1	Hook latch assembly	C1FA020-1071	C1FA030-1071	P1VS200-10712		C2BA150-9017	C3BA200-9071
81	1	Idle sheave assembly	C1FA050-1051	C3BA050-1051			-	-
	2		-	-	-	C3BA100-1052	-	-
	3		-	-	-	-	C3BA150-1051	
82	1	Shaft assembly	C3BA030-5053	C3BA050-5053		C3BA100-5054	-	-
83	2	Bottom yoke	C3BA030-2031	C3BA050-2031	C3BA075-9031	C3BA100-9031	-	-
84	2	Socket bolt	J1BE1-1003232	-	-	J1BE1-1605050	-	-
	3		-	J1BE1-1003232	-	-	-	-
	5		-	-	J1BE-1204040	-	-	-

85	2	Lever nut	C2BA200-9074	-	-	-	-	-
	3			C2BA200-9074	-	-	-	-
	5		-	-	C2BA400-9074	-	-	-
	1	U nut	-	-	-	C3BA100-90871	-	-
86	4	Guide	-	-	-	-	C3BA150-9018	-
	6		-	-	-	-	-	C3BA150-9018
87	2	Hook support	-	-	-	-	C3BA150-9026	C3BA200-9026
88	1	Bottom yoke	-	-	-	-	C3BA150-9030	C3BA200-9030
89	1	Bottom plate A	-	-	-	-	C3BA150-90342	-
	2		-	-	-	-	-	C3BA200-90341
90	1	Bottom plate B	-	-	-	-	C3BA150-9035	C3BA200-9035
91	1	Bottom plate C	-	-	-	-	-	C3BA20-9036
92	4	Stay-bolt	-	-	-	-	C3BA150-9038	C3BA200-9038
93	2	Collar A	-	-	-	-	-	C3BA200-9039
94	4	Collar B	-	-	-	-	-	C3BA200-9040
95	1	Bottom shaft	-	-	-	-	C3BA150-9054	C3BA200-9054
96	2	Key plate	-	-	-	-	C2BA050-9056	
97	2	Washer A	-	-	-	-	-	C3BA200-9058
98	4	Collar	-	-	-	-	-	C3BA200-9066
99	1	Nameplate A	-	-	-	-	C3BA150-9069	C3BA200-9069
100	4	Socket bolt	-	-	-	-	J1BE1-0801414	
101	8	Nut	-	-	-	-	J1NA001-10200	
102	4	Spring washer	-	-	-	-	J1WS011-20080	
103	8	Spring washer	-	-	-	-	J1WS011-20200	
104	4	Tongued washer	-	-	-	-	C3BA150-90911	
105	4	Bolt	-	-	-	-	J1BA1-1003030	
106	1	Chain pin	C3BA030-90411	C3BA050-90411				-
107	1	Slotted nut	C2BA015-90491	C3BA020-90492				-
108	1	Split pin	J1PW01-020014				J1PW01-020014	
109	1	Nameplate B	C3BG030-9800	C3BG050-9800	C3BG075-9800	C3BG100-9800	C3BG150-9800	-
	2		-	-	-	-	-	C3BG200-9800
110	1	Load chain	K7UN071-00000	K7UN090-J00000				
111	1	Hand chain	K7NA050-00000					-
	2		-	-	-	-	-	K7NA050-00000
114	1	Stopper assembly	-	-	-	ER1ES10411		-
	2		-	-	-	-	-	ER1ES10411
115	1	Washer	C3BG005-9158					
116	1	Nameplate C	C3BA030-9805		-	-	-	-

Spare parts table 4

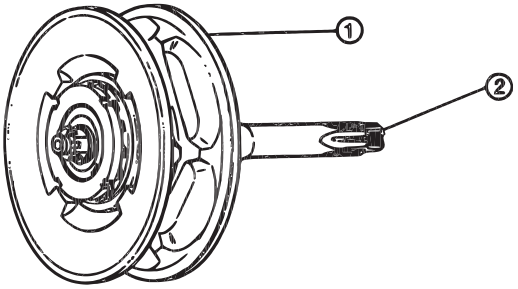

Spare parts table 5 and 6 shall be used in combination with the above illustration when ordering spares regarding the overload protection device.

Pos.	Qty.	Consisting of	0,5 ton K005	1 ton K010	1,5 ton K015	2 ton K020	2,5 ton K025
1	1	OLP assembly	C3YA005-1111	C3YA010-1111	C3YA015-1111	C3YA020-1111	C3YA025-1111
2	1	Pinion	C3YA005-9111	C3YA010-9111	C3YA015-9111	C3YA020-9111	C3YA025-9111

Spare parts table 5

Pos.	Qty.	Consisting of	3 ton K030	5 ton K050	7,5 ton K075	10 ton K100	15 ton K150	20 ton K200
1	1	OLP assembly	C3YA015-1111	C3YA025-1111				
2	1	Pinion	C3YA015-9111	C3YA025-9111				

Spare parts table 6

11.1.2 Model N hoist

Below illustration and spare parts table 7 shows the spare parts of a model N hoist from 0,5 to 5 ton.

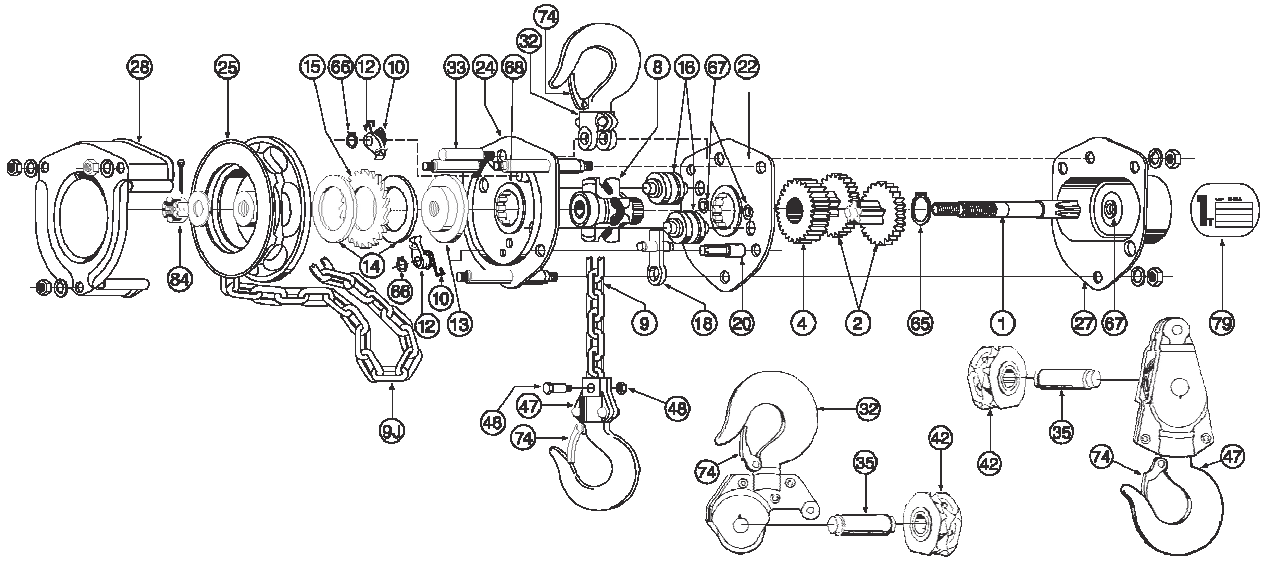

Pos.	Qty.	Consisting of	0,5 ton N005	1 ton N010	1,6 ton N016	2 ton N020	3,2 ton N032	5 ton N050
1	1	Pinion shaft	GHH5A001	JHH5A001	KHH5A001	LHH5A001	NHH5A001	KHH5A001
2	2	Pinion and pinion gear	GHH5A003T	JHH5A003T	KHH5A003T	LHH5A003T	NHH5A003T	KHH5A003T
4	1	Load gear	GHH5004	JHH5004	KHH5004	LHH5004	NHH5004	KHH5004
8	1	Load sheave	GH5008T	JH5008T	KH5008T	LH5008T	NH5008T	KH5008T
9	1	Load chain	Ø5	Ø3,3	Ø7,1	Ø8	Ø10	Ø7,1
9J	1	Hand chain	J-5					
10	2	Pawl spring	GHH5010		KHH5010			
12	2	Pawl	IRB3007		KRB3007			
13	1	Disc hub	GHH5A013	JHH5A013	KHH5A013	LHH5A013		KHH5A013
14	2	Friction disc	GHH5A014	JHH5A014	KHH5A014	LHH5A014		KHH5A014
15	1	Ratchet	GHH5A015	JHH5A015	KHH5A015	LHH5A015		KHH5A015
16	2	Load chain guide	GHH5016	JHH5016	KHH5016	LHH5016	NHH5016	KHH5016
18	1	Stripper	GHH5018U	JHH5018U	KHH5018U	LHH5018U	NHH5018U	KHH5018U
20	1	Load chain anchoring pin	GHH5020	JHH5020	KHH5020	LHH5020	NHH5020	KHH5020
22	1	Gear-side plate	GHH5A022T	JHH5A022T	KHH5A022T	LHH5A022T	NHH5A022T	KHH5A022T
24	1	Wheel-side plate assembly	GHH5024U	JHH5024U	KHH5024U	LHH5024U	NHH5024U	KHH5024U
25	1	Hand wheel	GHH5A025	JHH5A025	KHH5A025	LHH5A025	NHH5A025	KHH5A025
27	1	Gear cover	GHH5A027T	JHH5A027T	KHH5A027T	LHH5A027T	NHH5A027T	KHH5A027T
28	1	Hand wheel cover	GHH5028	JHH5028	KHH5028	LHH5028	NHH5028	KHH5028
32	1	Top hook assembly	GHH5032U	JHH5032U	KHH5032U	LHH5032U	NHH5032U	PHH5032U
33	1	Yoke pin	RH4010033		RH4015033	RH4020033	HH4030033	PH4015033
35	2	Idle sheave pin	-					PHH5035DN
42	2	Idle sheave	-					PHH5042S
47	1	Lower hook assembly	GHH5047U	JHH5047U	KHH5047U	LHH5047U	NHH5047U	PHH5047U
48	1	Load chain fastening bolt with nut	GHH5048T	JHH5048T	KHH5048T	LHH5048T	NHH5048T	PHH5048T
65	1	Snap ring for load sheave	SRC5122	SRC5125	SRC5130	SRC5138	SRC5145	SRC5130
66	2	Snap ring for pawl	SRC5108		SRC5112			
67	4	Plain pinion bushing	GHH5A067		KHH5A067	LHH5A067	-	KHH5A067
		Needle bearing	-				TR132713NR	-
68	2	Needle bearing for load sheave	TR273510NR	TR324210NR	TR364710NR	TR425313NR	TR506213NR	TR364710NR
74	2	Safety latch assembly	GHH5074T	JHH5074T	KHH5074T	LHH5074T	NHH5074T	PHH5074T
79	1	Label	GHH5A0791	JHH5A0791	KHH5A0791	LHH5A0791	NHH5A0791	PHH5A0791
84	1	Check nut	KN11M8		KN12M12			

Spare parts table 7

10 ton / N100

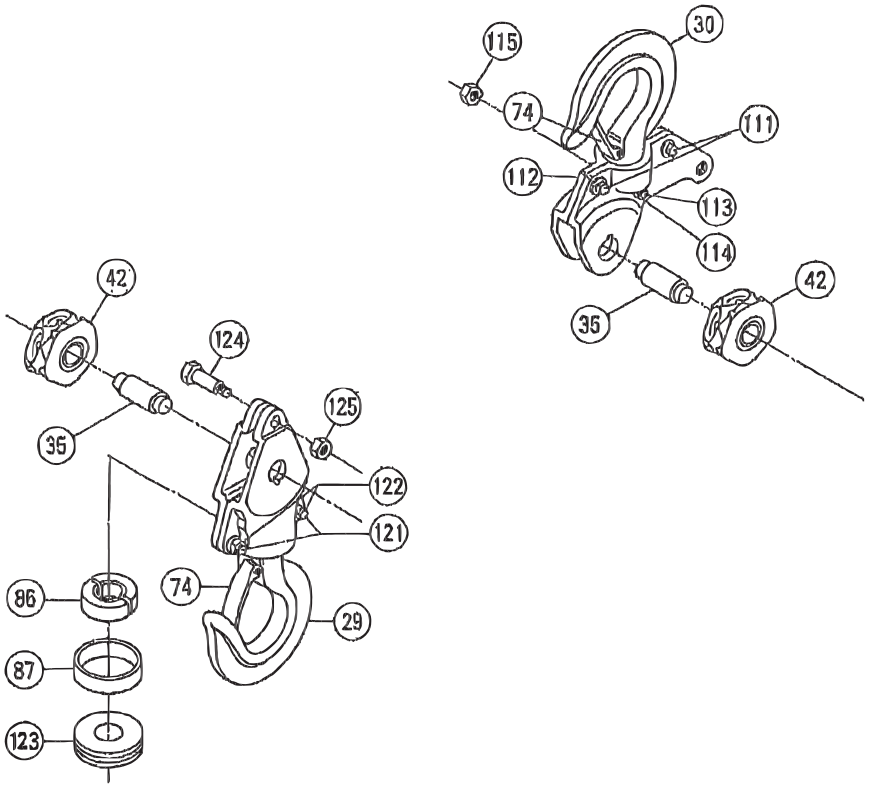

16 ton / N160

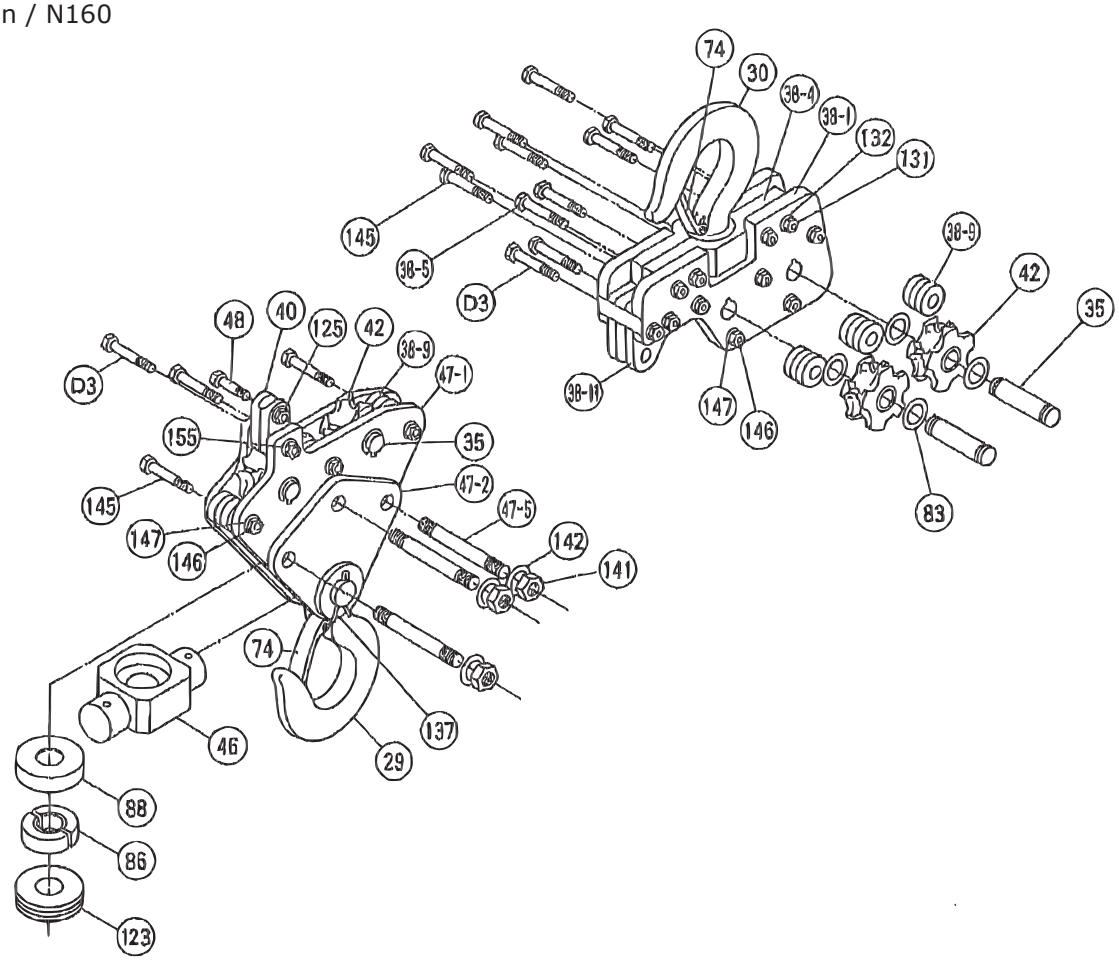

20 ton / N200

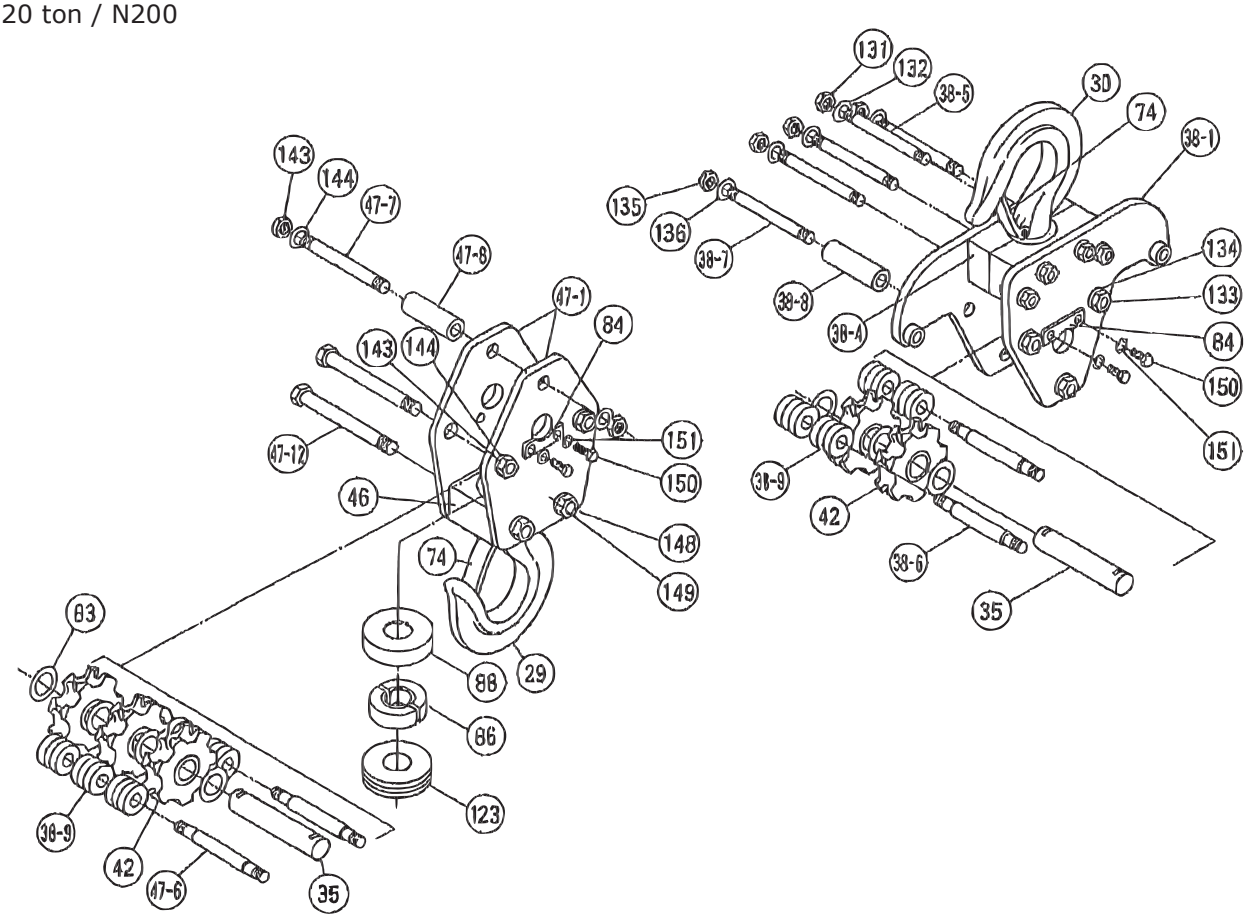

25 ton / N250

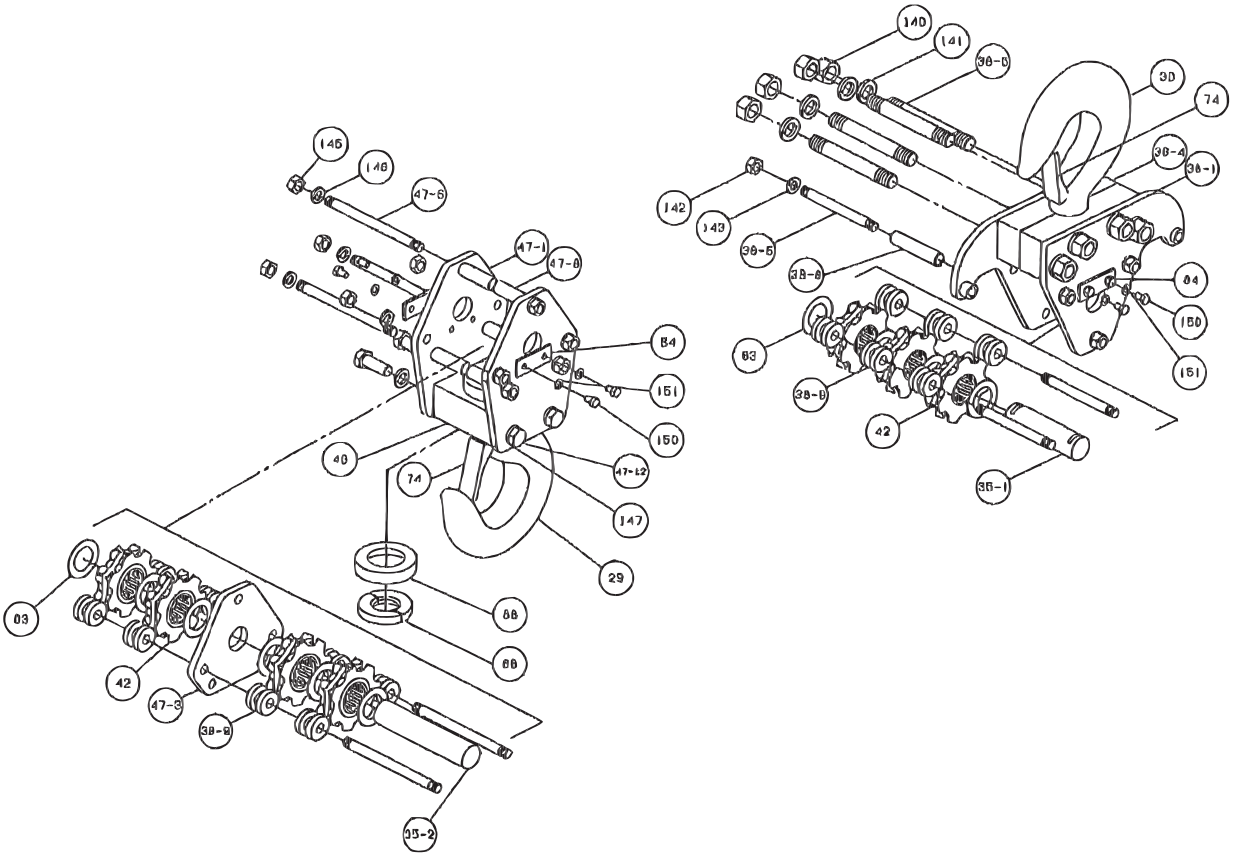

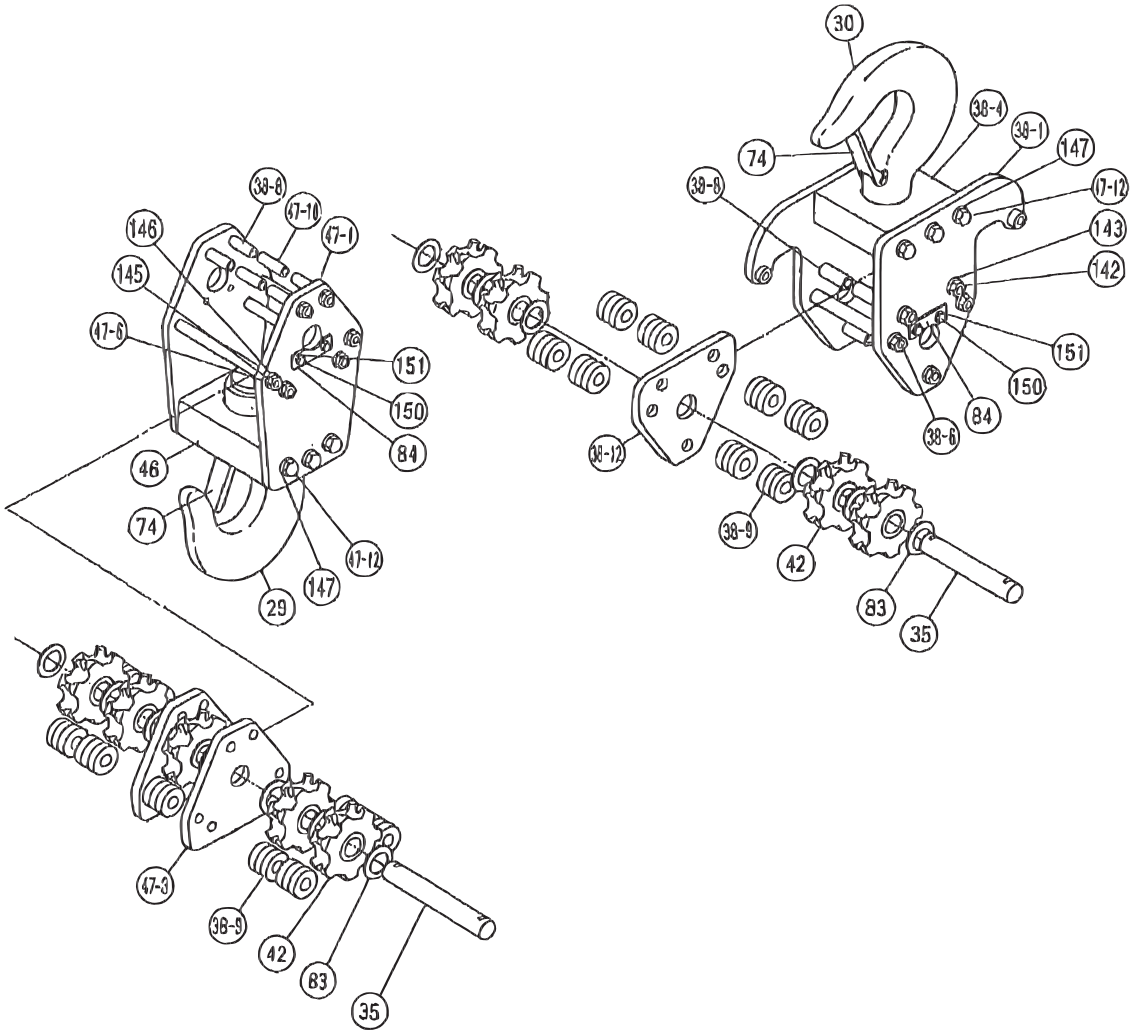

Spare parts table 8 in combination with the five previous illustrations shows the spare parts of a model N hoist from 10 to 32 ton.

Pos.	Consisting of	10 ton N100	16 ton N160	20 ton N200	25 ton N250	32 ton N320
29	Bottom hook	SHH50B29	UHH50B29A	VHH50B29A		XHH50B29A
30	Top Hook	SHH50T29	UHH50T29A	VHH50T29A		XHH50T29A
35	Wheel pin for hook	SSH5035	HH4100035	VHH5035	-	WHH5070
35-1	Wheel pin for top hook	-	-	-	VHH5035	-
35-2	Wheel pin for bottom hook	-	-	-	WHH5035	-
38-1	Side plate for yoke	-	UHH5A0381	VHH50381	WHH50381	XHH50381
38-4	Top cross	-	UHH5A0384	VHH50384	WHH50384	XHH50384
38-5	Stay bolt A for yoke	-	UHH5A0385	VHH50385	WHH5006A	-
38-6	Stay bolt B for yoke	-	-	VHH50386	WHH5006B	WHH5009B
38-7	Stay bolt C for yoke	-	-	VHH50387	-	-
38-8	Stay pipe for yoke	-	-	VHH50388	WHH50388	WHH5010
38-9	Chain guide roller	-	UHH5A0389	VHH50389	WHH50389	VHH50389
38-11	Joint plate	-	UHH5A03811	-	-	-
38-12	Centre plate for yoke	-	-	-	-	XHH50382
40	Chain stop plate	-	UHH5A040	-	-	-
42	Idle sheave for hook	SHH5042	VHH5042			
46	Bottom cross	-	ZHH5046	VHH5046	WHH5046	XHH5046
47-1	Side plate A for bottom holder	-	ZHH50471A	VHH50471	WHH50471	XHH50471
47-2	Side plate B for bottom holder	-	ZHH5009B	-	-	-

47-3	Centre plate holder	-	-	-	WHH50472	XHH50472
47-5	Stay bolt A for holder	-	UHH5A0475	-	-	-
47-6	Stay bolt B for holder	-	-	VHH50476	WHH5009B	XHH5009B
47-7	Stay bolt C for holder	-	-	VHH50477	-	-
47-8	Stay pipe for holder	-	-	VHH50478	WHH5010	-
47-10	Stay pipe B for holder	-	-	-	-	XHH5010B
47-12	Bolt for bottom cross	-	-	VHH504712	WHH504712	
48	Bottom holder bolt	-	UHH5048	-	-	-
74	Safety latch lever	SHH5074	UHH5074T	VHH5074T	UHH5074T	XHH5074
83	Link for hook wheel	-	SHH5036	VHH5083		
84	Key plate	-	-	VHH5084		
86	Cotter	SHH5054	UHH5054	VHH5054		-
87	Cotter cover	SHH5055	-	-	-	-
88	Cotter cover	-	UHH5088	VHH5088		-
111	Hexagon socket bolt	CBM16X40	-	-	-	-
112	Nylon nut	HNNIM16	-	-	-	-
113	Hexagon socket bolt	CBM12X35	-	-	-	-
114	Nylon nut	HNNIM12	-	-	-	-
115	Spring nut	HUNIM12L	-	-	-	-
121	Hexagon socket bolt	CBM16X40	-	-	-	-
122	Nylon nut	HNNIM16	-	-	-	-
123	Thrust	BT51110	BT51112	BT51115	-	-
124	Bottom holder bolt	SHH5048	-	-	-	-
125	Hexagon U nut	HUNIM12L	HUMIM12L	-	-	-
131	Hexagon nut	-	HNIM20	HNIM24	-	-
132	Spring washer	-	SWM20	SWM24	-	-
133	Hexagon nut	-	-	HNIM16	-	-
134	Spring washer	-	-	SWM16	-	-
135	Hexagon nut	-	-	HNIM16	-	-
136	Spring washer	-	-	SWM16	-	-
137	Cotter pin	-	SP8X70	-	-	-
140	Hexagon nut	-	-	-	HNIM30	-
141	Hexagon nut	-	HNIM24	-	HNIM20	-
142	Spring washer	-	SWM24	-	SWM30	HNIM20
143	Hexagon nut	-	-	HNIM16	SWM20	SWM20
144	Spring washer	-	-	SWM16	-	-
145	Hexagon bolt	-	HBBM16X90	-	HNIM20	HNIM20
146	Hexagon nut	-	HNIM16	-	-	SWM20
147	Spring washer	-	SWM16	-	SWM24	SWM24
148	Hexagon nut	-	-	HNIM16	-	-
149	Spring washer	-	-	SWM24	-	-
150	Hexagon bolt	-	-	HBM12X20	HBM12X20	HBM12X20
151	Spring washer	-	-	SWM12	SWM12	SWM12
155	Nylon nut	-	HNNIM16	-	-	-
D3	Yoke pin	-	MH4030D03	-	-	-

Spare parts table 8

11.2 Low headroom

Below illustration shows the spare part of an manual push and geared low headroom hoist trolley unit and shall be used in combination with spare parts table 9 and 10.

Tip! The shown position numbers are in accordance with chapter 3.9.2 "Low headroom".

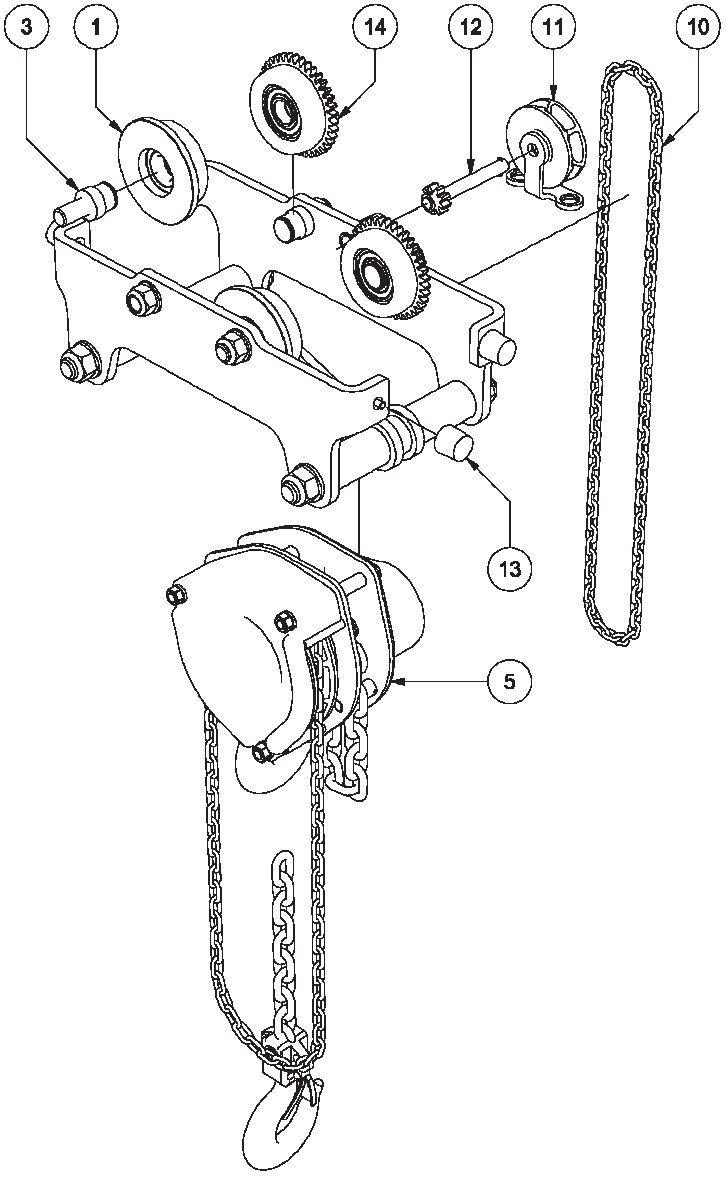

Low headroom manual push 81300... model N, 81310... model K

Pos.	Qty.	Consisting of	6 kN	11 kN	22 kN	33 kN	52 kN	104 kN
1	4	Single flange wheel Bearing Circlip						
3	4	Wheel shaft Hexagon lock nut Circlip						
5	1	Hoist	See chapter 11.1.1 "Model K hoist" or 11.1.2 "Model N hoist".					
13	4	Buffer Hex head bolt						

Spare parts table 9

Low headroom manual geared 81400... model N, 81410... model K

Pos.	Qty.	Consisting of	6 kN	11 kN	22 kN	33 kN	52 kN	104 kN
1	2	Single flange wheel Bearing Circlip	-					
3	4	Wheel shaft Hexagon lock nut Circlip	-					
5	1	Hoist	See chapter 11.1.1 "Model K hoist" or 11.1.2 "Model N hoist".					
10	1	Hand chain	-					
11	1	Hand chain wheel Hand chain guide	-					
12	1	Drive shaft Pinion Spring pin	-					
13	4	Buffer Hex head bolt	-					
14	2	Single flange geared wheel Bearing Circlip	-					

Spare parts table 10

11.3 Ultra low headroom

Below illustration shows the spare part of an geared ultra low headroom hoist trolley unit and shall be used in combination with spare parts table 11.

Tip! The shown position numbers are in accordance with chapter 3.9.3 "Ultra low headroom".

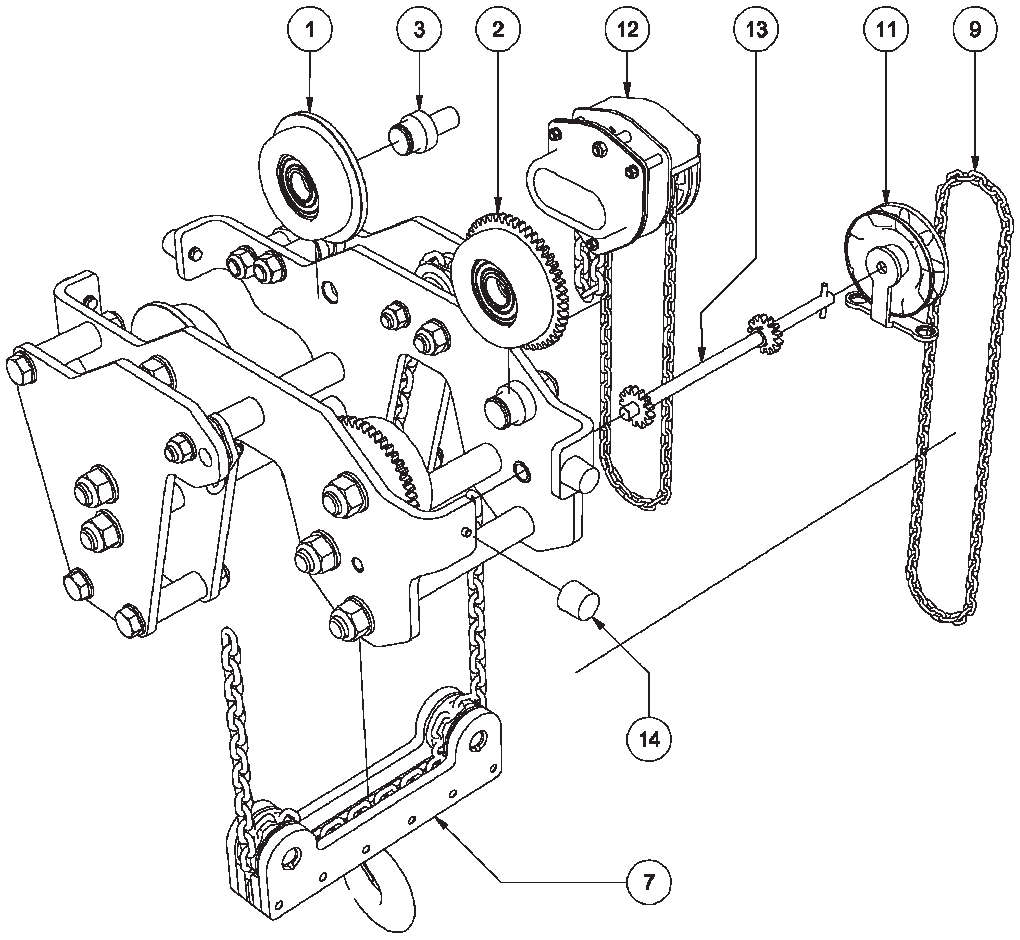

Ultra low headroom manual geared 81650... model N, 81660... model K

Pos.	Qty.	Consisting of	22 kN	33 kN	52 kN	84 kN	124 kN
1	2	Single flange wheel Bearing Circlip					
2	2	Single flange geared wheel Bearing Circlip					
3	4	Wheel shaft Hexagon lock nut Circlip					
7	1	Bottom hook block Load hook					
9	1	Hand chain					
11	1	Hand chain wheel Hand chain guide					
12	1	Hoist	See chapter 11.1.1 “Model K hoist” or 11.1.2 “Model N hoist”.				
13	1	Drive shaft Pinion Spring pin					
14	4	Buffer Hex head bolt					
14	2	Single flange geared wheel Bearing Circlip					

Spare parts table 11

Appendix I. Logbook

The following table can be used to write down the results of installation, commissioning, maintenance, repairs, etc...

Date	Inspected by	Results

Appendix II. Technical specifications

If applicable, the technical documentation will be included as a separate document.